Radio Systems Millenium-D Digital Console

Installation and Operation Manual

Radio Systems Millenium Digital Broadcast Manual Part # MAN-MILLCOND

For Console Models:

RS-6D

RS-12D

RS-18D

RS-6DNET (include network manual supplement)

RS-12DNET (include network manual supplement)

RS-18DNET (include network manual supplement)

Manual Revision 11-05-2014
for serial numbers 100859 and higher

Revisions to include

Sect 2.2.3 Updated to reference Correct Jumper designations per Illustration B-1
Illustration D-3 Updated to call out Mute 1 DIM Control
Illustration B-1 Updated to detail new Control Board part # 18522
Illustration B-1 Updated to detail “classic” remote control protocol
Sect 2.2.10 Updated to reference New Control Prom 18407 Functionality
Illustration B-2 Updated to detail Cue/IFB Control
Illustration B-3 Included to detail “Classic” Control
Illustration D-1 Corrected Part #14800B
Illustration D-2 Corrected Part #15354B
Illustration F-1 Corrected Part #18516/18522
Illustration F-2 Corrected Part #18522
Illustration F-7 & F-8 Corrected Part #15277
Parts List F-9 Corrected Part #15831 to White LED

Copyright 2010 by Radio Systems Design, Inc. All rights reserved. Radio Systems Design, Inc. reserves specification privileges. Information in this manual is subject to change without notice.

Technical support: +1-856-467-8000 or tech@radiosystems.com

Installation/Wiring/Operation 5
1.1 Console Placement 5
1.2 Opening the Console 5
1.3 Power Supply 5
1.3.1 Installation 5
1.4 Wiring Access Layout 5
1.4.1 Audio Inputs 5
1.4.2 Audio Outputs 5
1.4.3 Control 6
1.4.4 Audio Connectors 6
1.4.5 Wiring Quick Connectors 6
1.4.6 Grounding and Shielding 6
1.5 Operation 6
1.5.1 Input Assignment 6
1.5.2 Mic Use 7
1.5.3 Cue Circuitry 7
1.5.4 Output Routing 7
1.5.5 Utility Buses 7
1.5.6 Mix-Minus via the “TEL” Bus 7
1.5.7 Monitor Amplifier Output Select 7
1.5.8 Headphone Amplifier Output Select 8
1.5.9 VU Meter Selection (six channel consoles only) 8
1.5.10 Remote Control 8
1.5.11 Eight Position Switcher 8
1.5.12 Console Clock Timer 8
Illustration A-1 CT-2002 Console Clock/Timer/Master Clock 9
Illustration A-2 CT-2002 Console Clock/Timer Wiring Diagram 10
Illustration A-3 LED Meter Board with Talkback Microphone 11

Six Channel Control Board 12
2.1 Overview 12
2.2 Function Programming 12
2.2.1 Channel Power-Up Mode 12
2.2.2 Remote Control Options – by Channel 12
2.2.3 Remote Control Options – by Input 13
2.2.3.1 Pulse/Holding Remote Control 13
2.2.3.2 Send Through of Remote On/Off Commands 13
2.2.4 Muting Buses 13
2.2.5 Timer Reset 13
2.2.6 Cue Options by Channel 14
2.2.6.1 Cue on Fader Detent 14
2.2.6.2 Auto Cue 14
2.2.6.3 Cue Defeat on Channel ON 14
2.2.6.4 Cue Exclusive 14
2.2.7 Cue Options by Input 14
2.2.8 Off (Ready) Lamp Options 14
2.2.9 Analog/Digital programming 15
2.2.10 Remote Control Connector 15
2.2.11 Optional Remote Control Board 15
2.3 Monitor Control Board 15
Illustration B-1 Six Channel Control Board Jumper Settings 16
Illustration B-2 Remote Control Wiring (factory default with Cue for IFB) 17
Illustration B-3 Remote Control Wiring (“Classic” Mode) 18

Six Channel Audio Mother Board 19
3.1 Input Connectors 19
3.2 Input Configurations 19

3.2.1 Input Wiring 19
3.3 Analog Daughter Cards 19
3.3.1 Unbalanced Analog Audio 19
3.3.2 Analog Mono Inputs - for Mic and Line Level 19
3.3.3 Input Sensitivity 19
3.3.4 Phantom Power 20
3.4 Digital Daughter Cards 20
3.4.1 Unbalanced Digital Audio 20
3.5 “Patch-Point” Connections 20
Illustration C-1 Analog input plug-In Board p/n 15303 21
Illustration C-2 Digital Input Plug-In Board 15304 22
Illustration C-3 6 Input Mother BoardRJ-45 Connector Version 23
Illustration C-4 6 Input Mother Board5 Pin Connector Version 24

Output Boards 25
4.0 Overview 25
4.1 Analog Output Board 25
4.1.1 Program and Audition Analog Outputs 25
4.1.2 “TEL” Output 26
4.1.3 External Monitor and Headphone Inputs 26
4.1.4 Headphone Outputs 26
4.1.5 Monitor Sends 26
4.2 Digital Output Board 27
4.2.1 Digital Program Outputs 27
4.2.2 Digital Utility Outputs 27
4.2.3 RS-232 Connectivity 27
4.2.4 Clock Rate (Digital Sync.) 28
4.2.5 Eight Position Switcher 28
4.3 Control Wiring 28
4.3.1 Mute and Timer Reset Bus Connections 28
4.4 Talk Back Connections 28
4.5 Intercom Kit 29
4.6 Internal Adjustments and Level Calibration 29
4.6.1 Program Bus Output Level Adjust 29
4.6.2 VU Meter “0” Calibration 30
4.6.3 Peak LED Trip Point Calibration 30
4.6.4 External Monitor Input Level 30
4.6.5 Cue Bus External Input Level 30
Illustration D-1 Analog Output and Meter Board 5-Pin 31
Illustration D-2 Analog Output and Meter Board RJ-45 32
Illustration D-3 Digital Output and Processor Board RJ-45 33
Illustration D-4 Digital Output and Processor Board 5-Pin 34
Illustration D-5 Auxiliary Control Relay Wiring 35
Illustration D-6 Talkback Wiring 36
Illustration E-1 Enhanced Remote Interface Card 37
Illustration E-2 Four Source Router Card 38
Illustration E-3 DA Mixer Card 39
Illustration E-4 DA Mixer Card Programming Examples 40
Illustration E-5 Intercom Wiring Card 41
Illustration E-6 Intercom Card Table-Top Speaker & Console Interconnection 42
5.1 Description – Overview 43
5.2 Operation 43
5.3 Installation and Wiring 43
5.3.1 Control Wiring 43
5.3.2 Intercom card audio wiring 43
5.3.2.1 Console internal wiring 43
5.3.2.2 Table-top speaker wiring 43

5.3.2.3 Console interconnection 44
5.4 Calibration 44

Using Active Balanced Circuitry 45

Six Channel Control Board Schematic F-1 46
Parts Layout F-2/3 47
Parts List F-4/5 48

Monitor Board Schematic F-6 49
Parts Layout F-7/8 52
Parts List F-9 54

CT-2002 Clock/Timer Schematic F-10/11 55
Parts Layout F-12 57
Parts List F-13/14/15 58

Analog Output Board Schematic F-16/17/18 61
Parts Layout F-19 64
Parts List F-20/21/22 65

Power Supply Interface Schematic F-23 68
Parts Layout F-24/25 69
Parts List F-26 71

Console DA Mixer Schematic F-27/28 72
Parts Layout F-29 74
Parts List F-30 75

Console VU Meter Schematic F31 76

Console VU Meter Schematic F32 77

Millenium Digital Console Specifications 78
Frequency Response 79

Millenium Digital Consoles Parts Ordering 80

Millenium Consoles - Warranty and Repair Policies Warranty 81
Repair Policy 81
Return Instructions 81

Millenium - Digital Console Software 82
Overview 82
Utility Buses 83-85
Output Levels 86
Channel Settings 87-89
8 Position Switches 90
Communications/Serial COM Port 91-92
Help Screens 93

Installation/Wiring/Operation

1.1 Console Placement

Because neither ventilation nor rear access is required, the console may be mounted on any sturdy surface. Opening the lid provides access to all electronics, internal controls and wiring points.

After placing the console, open the lid and mark the cable access slots on the chassis bottom on the table surface. Remove the console and cut the slots with a saber saw. The console may then be permanently mounted with two #10 sheet metal screws inserted through the two holes provided in the front of the chassis' bottom pan.

1.2 Opening the Console

A "T"-shaped lifter is provided to open the console. The external lifter discourages unauthorized access to console electronics. Keep it in a secure place. Resist the urge to use the right-hand rotary knobs to raise the console lid as this will quickly result in damage to these faders.

This lifter can be inserted in any fader slot, rotated 90^0 and used to raise the lid. Once the lid is opened, pull the two hinges forward to lock the lid open.

To close the lid, push the hinges in to release the locks, while holding the lid up with the "T" lifter, and gently lower the console.

1.3 Power Supply

1.3.1 Installation

All console operating voltages are provided by the external power supply that connects to the console via a multi conductor cable. A ten-foot length is provided as standard equipment. Longer lengths, up to 20 feet, are available from the factory.

To connect the console end of the power supply cable, pass the other end of the cable (with the smaller ground lug) through the rectangular hole on the center right-hand-side of the console base. Screw the ground lug under the mounting screw on the front right hand side of the Output Board. Plug the 10 position connector into J3 and the 4 position connector into J4. Take extreme care to plug these connectors in with the correct orientation - locking tab to locking tab (with cables exiting towards the right hand side), as it is possible to plug them in backwards.

A grounding stud is provided on the rear of the power supply. Console grounds reach a common point at the power supply. To minimize RFI and potential ground loop problems, the console should only be connected to station ground at this one ground stud.

In intense RF environments, or if you experience any RFI problems, consult RFI suppression in the Troubleshooting and Theory of Operation Section for detailed information.

1.4 Wiring Access Layout

1.4.1 Audio Inputs

All audio inputs wire to connectors at the rear the Six Channel Mixer Board(s) on the base of the console. One Six Channel Input Mother Board is utilized for every 6 audio channels and supports and houses any combination of up to six plug-in Analog or digital Input Daughter Cards. Analog or digital inputs are wired via the same audio connectors. Pin-out diagrams are provided in the Six Channel Mixer Board section.

1.4.2 Audio Outputs

All audio outputs wire to connectors at the rear of the Analog and Digital Output Boards on the right-hand pan of the console. Note that these two circuit boards are stacked, with the digital board on top. The lower Analog board houses all analog Program Outputs, External monitor inputs, Monitor sends and Talkback and muting audio and control. The upper digital output board houses all digital program outputs, as well as analog and digital Mix Minus outputs.

1.4.3 Control

The front panel mounted Six Channel Control Board houses one 15 pin D connector to wire each channel's remote control.

Consult the Six Channel Control Board Section of this manual for detailed information on control remote functions and programming options. Consult the Interface Options and Accessories Section of this manual for detailed information on the optional interface card applications, wiring and function.

Use the included 15-pin D connector ribbon extenders to plug in the mating D connectors external to the console, as internal clearance for these connectors is not available inside the console.

1.4.4 Audio Connectors

Millenium Digital consoles may be ordered with 5-pin removable barrier strip connectors or with RJ-45 connectors for all audio inputs and outputs. Consult the circuit board layout diagrams in the Six-Channel Mixer board and the Output and Meter Board section of this manual for connector locations and wiring pin-outs.

1.4.5 Wiring Quick Connectors

The 5-pin barrier strip connectors are identical to those that are used in Millenium Analog consoles. When hand wiring 5-pin removable barrier strip connectors, use 22 AWG shielded wire for audio connections. The cable should be stripped so that the insulation comes close to, but does not enter, the connector. Insert the cable into the connector and tighten the screw. If desired, first tin the cable to ensure a secure connection.

The RJ-45 connectors conform to the StudioHub+ standards for analog and digital CAT-5 based wiring. When using the RJ-45 connectors, conform wiring to 568B CAT-5 standards and follow standard IT CAT-5 practices, or utilize pre-made StudioHub+ wiring and accessories. See http://www.studiohub.com for more information.

StudioHub+ wiring harnesses that bring all input and output connections to convenient connection blocks outside the console are available from Radio Systems. Consult the factory for literature.

1.4.6 Grounding and Shielding

The installer should elect whether cable shields will terminate (connect) on the equipment side or console side. The general rule is that shields should not be terminated on both to avoid ground loops.

For shields that do terminate on the console side, on-board jumpers are provided for every input and output, analog and digital on both the Six-Channel Mixer Board and the Output Boards to allow the programming of the following ground options for each cable:

1- Unterminated; insert no jumper for the ground to float

2- Chassis Terminate; insert a jumper between the center and "CH" pins to connect the cable ground to the console chassis ground. This option is recommended for digital (AES-EBU) inputs and most analog signal.

3- Circuit Board Terminate; insert a jumper between the center and "CB" pins to connect the cable ground to the console circuit board grounds. In the case of the Six-Channel Mixer Board this will connect the cable ground to separate and isolated console ground buses for both the Analog and digital daughter plug-in cards. This option is recommended for some Analog signals (AES-EBU), inputs and most analog signals.

1.5 Operation

Millenium digital Consoles have been designed to offer the greatest combination of user flexibility and operating ease.

Foremost, the console should be installed and operated in accordance with station format, personnel habits and engineering principles. However, the following sections suggest some operational possibilities that were considered in the console design.

1.5.1 Input Assignment

Traditionally, commonly used inputs are assigned to input "A". This gives the operator quick assurance of proper input selection.

1.5.2 Mic Use

Mic channels should always be activated with the slider down, and then “potted up” to avoid a sudden “room rush” of background sound.

Cue speaker muting is only provided when a mixing channel is turned “on”. Therefore, feedback can occur between the cue speaker or the monitor speakers (if cue monitoring is selected) and a mic input if the mic channel is placed in cue. To avoid this possibility, install the cue inhibit jumpers on the section of the Six Channel Control Board associated with the mic channel. This will prevent a mic channel from entering the cue mode and possibly cuing feedback. Consult the Six Channel Control Board Section for details on programming information.

1.5.3 Cue Circuitry

Unless disallowed by jumper removal, all selected inputs maybe placed on the cue bus by depressing the cue button, located above the fader. Refer to Section 2.2 for additional information.

The cue signal is monitored by the cue speaker, and level adjusted by the front panel cue level control. The cue speaker is muted by any input that is turned “on” and that was pre-selected during installation to activate the Mute 1 control bus. The internal cue speaker may be disconnected and a remote speaker connected in its place. Consult the Output Board Section for detailed information on wiring.

In addition, the cue signal maybe selected for monitoring by the headphone or monitor amplifier select switches.

1.5.4 Output Routing

Each mixing channel can be routed to any combination of Program, Audition, and Tel (mono) mix buses. The program and audition buses provide identical stereo performance allowing the audition output to be used as a back up to the program bus, as a separate program bus, or to preview or record material.

1.5.5 Utility Buses

Millenium digital consoles feature 10 fully programmable utility buses. Via software programming every input may be routed to any mix minus bus on a pre or post fader, or pre or post on-off switch basis.

Applications for the Utility buses include traditional “mix minus” uses, fold-back monitoring special monitor sends and intercom functions.

Mix minus configurations can ONLY be changed via the Millenium PC software link. Consult the software section for connection, programming and configuration options.

1.5.6 Mix-Minus via the “TEL” Bus

Talk show hybrid telephone patches frequently require a return feed to the caller that does not contain his own voice (mix minus). To accomplish this, the host may be routed to Program and TEL and the caller to Program only. The TEL bus should then be fed back to the telephone hybrid and Program audio used to feed the air chain. To prevent feedback in this application, the studio monitor speakers should not be used.

A “fold back” feed can also be created by feeding all microphone inputs into the program mix bus, and feeding all other inputs to both program and audition mix buses. Switch the monitor speakers to audition and feed the air chain with program signal. In this application, the mic inputs need not mute the monitor speakers, as no feedback will result.

1.5.7 Monitor Amplifier Output Select

The monitor input select switches on the right-hand side of the console allow monitoring of program, audition, tel, cue and four external stereo inputs which are common to the monitor and headphone circuitry. All monitor outputs follow these switches. Level adjustment for the control room monitor output is provided on the front panel. In addition, the control room monitor output is dimmed to a level that has been preset by a trimmer on the Output Board by the Mute 1 control bus. A studio monitor output that is muted by the Mute 2 bus, and an unmuted monitor output are also provided. In addition, a prefader, unmuted monitor output is available.

1.5.8 Headphone Amplifier Output Select

The headphone input select switches on the right-hand side of the console allow monitoring of program, audition, tel, cue and four external stereo inputs which are common to the headphone and monitor circuitry. All headphone outputs follow these switches. Level adjustment and connection for the operator's headphones are provided on the front panel. In addition, a pre-fader headphone output is available for driving an external headphone amplifier.

1.5.9 VU Meter Selection (six channel consoles only)

The six channel console provides only three meters. One meter is dedicated to the mono output, while the remaining two are selected by a front panel switch to display either program or audition outputs. The peak LED's in the meters also follow the VU meter select switch.

1.5.10 Remote Control

The Millenium Consoles provide extensive remote control interface ability via a 15 pin D connector located at each mixing channel. Each channel has the capability to remote start almost any source. In addition, each channel provides inputs for remote control of channel on/off and ready lamp illumination.

Sophisticated control interface is also accommodated via the use of the optional interface card (RS Part# REMOTE). See Section 2.2.11 and Illustration E-1 for additional information.

Use the included 15-pin D connector ribbon extenders to plug in the mating D connectors external to the console, as internal clearance for these connectors is not available inside the console.

1.5.11 Eight Position Switcher

Eight accessory switchers are provided on the right-hand side of the console control panel for optional user control of external equipment, console accessory boards and mix-minus sends. The switches and their associated LED indicators are wired directly to the digital output board and read by the digital processor. Connections for accessory boards and special external switching are then made directly to connectors J39 and J43 on the digital out-put board. Consult section 2.3 in the Six Channel Control Board section and diagrams D-3 and D-4 in the Output Board section for more information.

Software Tip Consult the "8 Position Switches" page in the "Software" section of this manual for optional switch functionality assignment.

1.5.12 Console Clock Timer

All Millenium consoles include a Radio Systems CT-2002 clock/timer in the upper right section of the console overbridge. Front panel console controls are provided to locally set the time of day and control timer functions. An IR Remote Control optionally available to set timer down times. Time of Day displays function as clocks or timers and may also be used as slaved clock display synchronized from either RS Timecode, SMPTE Timecode, or a Top-of-Hour reset pulse.

Consult illustrations A-1 and A-2 at the end of this section for clock wiring and operation.

Illustration A-1
CT-2002 Console Clock/Timer/Master Clock

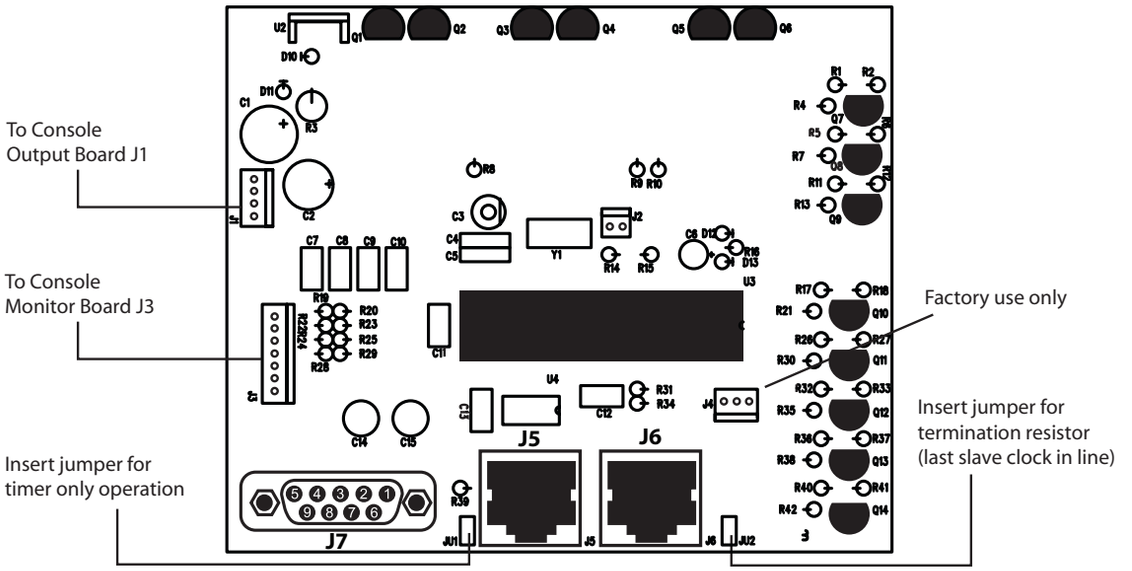

J7 (9 Pin D Female)

Pin 1	Serial Data Out +
Pin 2	Serial Data In +
Pin 3	Serial Data In -
Pin 4	Serial Data Out -
Pin 5	GND
Pin 6	TOH Reset
Pin 7	GND
Pin 8	N/C
Pin 9	N/C

J5 Serial Input (RJ-45)

Pin 1	n/c
Pin 2	n/c
Pin 3	Input +
Pin 4	GND
Pin 5	TOH Input
Pin 6	Input -

J6 Serial Loop-Thru (RJ-45)

Pin 1	Output +
Pin 2	Output -
Pin 3	Input +
Pin 4	GND
Pin 5	TOH Input
Pin 6	Input -

General Operating Instructions
All units may operate in stand-alone or slave displays. Clock Set and Up Timer functions can be controlled by the front panel buttons or the infra-red remote control. However, the IR remote control is required for entering down times and internal setup functions.

Console Front Panel or Wired Remote Operations
Clock/Timer (Mode) Select
All CT-2002 unites operate as both clocks and timers. Switch between modes by pressing the MODE button on the console front panel. The front panel LED will light to indicate the mode selected.

To Set the Clock:
1. Press the mode button to select the time-of-day display. The clock LED will illuminate.
2. Press and hold the STOP and START buttons. The set LED will illuminate. The display will reset to 12:00:00.
3. Press the STOP button to advance the hours. Press the RESET button to advance the minutes (note - seconds are not setable and remain at :00.
4. Start the clock at the top of the minute by pressing the START button. The set LED will extinguish.

Note: If Serial Time of Day is supplied to the CT-2002 (slave mode), it will not be possible to enter the Clock Set Mode. Time-of-Day set can be done at the master unit. The displayed hours can be offset via the IR Remote Control.

To Use the Up Timer
1. Press the Mode Button to select the timer display. The timer LED will illuminate.
2. Press the START button to start timing.
3. Press the STOP button to stop timing.
4. Press the RESET button to return the display to 00:00

Note: Press the Auto button to allow automatic reset and start of the timer when a console channel on button is depressed. (programming of JU15 for input A or JU17 for input B to allow this function on each channel is required.)

Illustration A-2
CT-2002 Console Clock/Timer Wiring Diagram

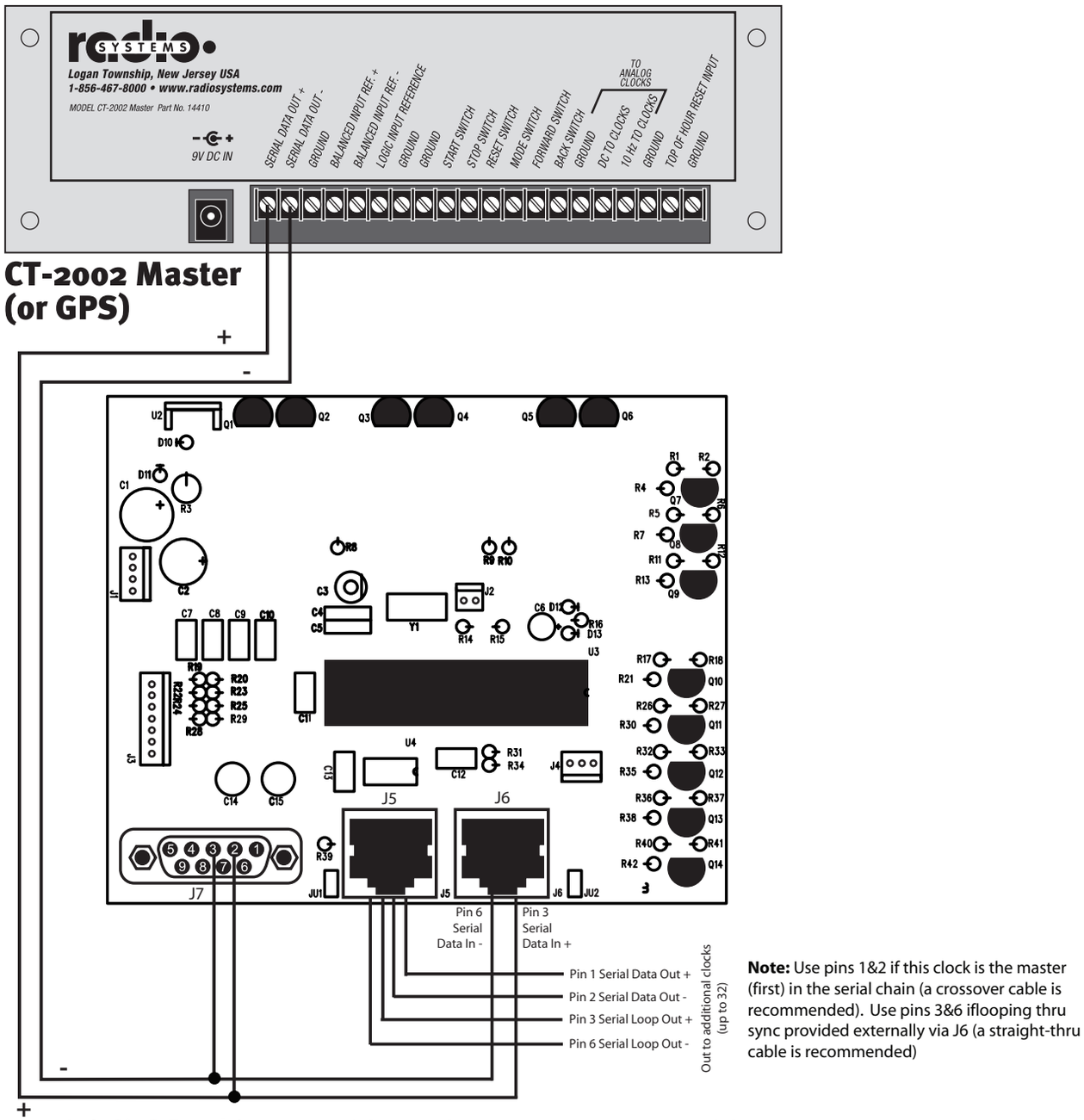

Note: Use pins 1&2 if this clock is the master (first) in the serial chain (a crossover cable is recommended). Use pins 3&6 iflooping thru sync provided externally via J6 (a straight-thru cable is recommended)

J7 (9 Pin D Female)

Pin 1	Serial Data Out +
Pin 2	Serial Data In +
Pin 3	Serial Data In -
Pin 4	Serial Data Out -
Pin 5	GND
Pin 6	TOH Reset
Pin 7	GND
Pin 8	N/C
Pin 9	N/C

J5 Serial Loop-Thru Output (RJ-45)

Pin 1	Output +
Pin 2	Output -
Pin 3	Input +
Pin 4	GND
Pin 5	TOH Input
Pin 6	Input -

J6 Serial Input (RJ-45)

Pin 1	n/c
Pin 2	n/c
Pin 3	Input +
Pin 4	GND
Pin 5	TOH Input
Pin 6	Input -

* S/N RS-14503 11/2003) and later

Illustration A-3
LED Meter Board with Talkback Microphone

Radio Systems p/n 16636

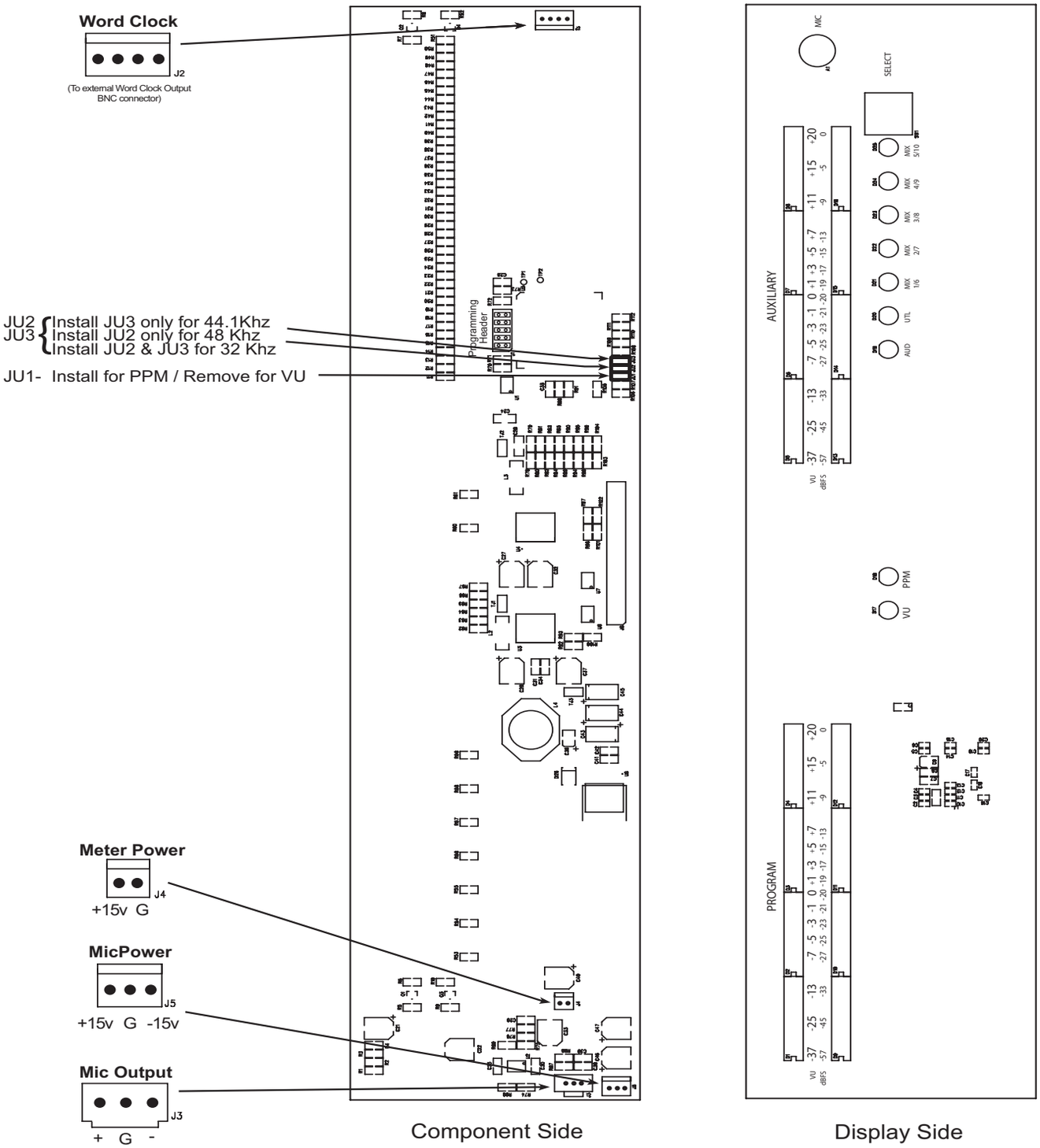

Six Channel Control Board

2.1 Overview

One Six Channel Control Board is provided for every six input channels. This card sends DC control voltages to the Six Channel Audio Board that:

Selects A/B Inputs

Sets output bus and cue routing

Sets input level attenuation

Activates muting buses

Activates timer reset bus

This information is conveyed via 16 conductor ribbon cables; one cable for every mixing channel.

Eighteen programming straps also reside on this board at each channel position and are used to set all unique channel and input board functions.

The board also includes a 15 pin remote control connector for each channel providing user access to all remote and channel functions.

Programming options available for each channel include:

Remote Control Options – by channel

Remote Control Options – by input

Muting Buses – by input

Timer Reset – by input

Cue Options- by channel

Cue Options – by input

Off (ready) lamp control operations – by input

2.2 Function Programming

2.2.1 Channel Power-Up Mode

This programming feature will memorize channel input, bus, and on/off state so that the channels will automatically return to these memorized states on power up. The default power up mode (with no programming) is Input A, PGM and channel OFF.

To utilize this feature, select the combination of input, bus, and on/off states that are desired at power up on a particular channel. Next, press and hold the ON switch for 5 seconds. The ON lamp will blink, indicating that this power up preset is memorized.

Repeat this procedure for each channel where special power up states are desired.

2.2.2 Remote Control Options – by Channel

Fader Start – The channel may be programmed to automatically turn on whenever the fader is brought out of the detent (cue) position. All programmed channel on functions (e.g. remote starts or timer reset) will activate at this time.

Note that a special order fader with detent (RS Part # P&G) is required for this option.

Insert jumper **A** to activate.

Default is no jumper; no fader start

See Illustration B-1, Pg16

2.2.3 Remote Control Options – by Input

2.2.3.1 Pulse/Holding Remote Control

Insertion of these jumpers determine whether the remote control pins on the remote control connector pulse to ground when the channel is turned on, or remain at ground potential for the duration of the channel on state.

Pulse mode is generally used for PC and CD player control. Holding mode is generally selected for skimmer and other units that require on/off control.

Insert jumper **H** for input A – holding mode.

Default is no jumper; pulse mode.

Insert jumper **C** for input B – holding mode.

Default is no jumper; pulse mode.

2.2.3.2 Send Through of Remote On/Off Commands

Installation of these option jumpers will cause channel on/off commands that were initiated remotely (i.e. sent to the channel via remote connector pins 1, 2, 5, or 12) to, in turn, create remote on/off output pulses (i.e. send remote control commands to external equipment via remote connector pins 3, 4, 7, or 11). Normally, you would not want these remote channel commands to be “sent through”, thereby creating a new command and potentially retriggering the remote device via a false echo of the original command. This situation would apply when a remote device is wired to both control and be controlled by an input channel; typically the case with a digital storage system that is wired to be both remotely started by the channel, and turn off the console channel at the end of the audio cut.

Insert jumper **D** to enable send through in input A.

Default is no jumper; no send through.

Insert jumper **B** to enable send through in input B.

Default is no jumper; no send through.

2.2.4 Muting Buses

Two muting buses, referred to as mute 1 and mute 2, perform the following functions:

Mute Bus 1 – mutes the cue speaker, dims monitor send #1, pulls mute 1 terminal 5 to ground on Output Board connector J7.

Mute Bus 2 – mutes monitor send #2, pulls mute 2 terminal 4 to ground on Output Board connector J7.

Insert jumper **T** for input A to mute bus 1.

Default is no jumper; no mute.

Insert jumper **P** for input A to mute bus 2.

Default is no jumper; no mute

Insert jumper **V** for input B to mute bus 1.

Default is no jumper; no mute

Insert jumper **R** for input B to mute bus 2.

Default is no jumper; no mute

2.2.5 Timer Reset

Inserting timer reset jumpers activates of the timer reset bus in conjunction with a selected input. The bus will go low momentarily (100 ms) when the mixing channel is first placed into the “On” mode. Depressing the “On” button after the channel is already turned “On” will result in another pulse of the bus.

Insert jumper **S** for input A to reset the timer.

Default is no jumper; no timer reset.

Insert jumper **V** for input B to reset the timer.

Default is no jumper; no timer reset.

See Illustration B-1, Pg16

2.2.6 Cue Options by Channel

2.2.6.1 Cue on Fader Detent

Enable this function to allow the operator to put the channel in cue by dropping the fader into the detent (fully down) position. Note that a special-order fader with detent (RS Part #P&G) is required for this option.

Insert jumper **K** to enable cue on detent

Default is no jumper; no cue on detent

2.2.6.2 Auto Cue

Cue follows channel On/Off mode with this option enabled. The channel will automatically go into cue whenever the channel is turned off. With this function enabled, cue still can be activated via the cue switch or fader detent.

Insert jumper **J** to enable auto cue

Default is no jumper inserted; no auto cue

2.2.6.3 Cue Defeat on Channel ON

Insert jumper **F** to cause the Cue Mode to be turned OFF whenever the channel is cycled from OFF to ON. Cue must then be manually reselected when the channel is turned OFF.

2.2.6.4 Cue Exclusive

Software Tip The "Cue Exclusive" function automatically causes any selected console Program buses on this channel to mute when the cue function is engaged.

In the Millenium digital console the "Cue Exclusive" function is available only via software selection. See the "Channel Settings" page in the software section of this manual for programming details.

2.2.7 Cue Options by Input

Install these jumpers to disallow the channel from going into cue when a particular input is selected. This option is normally utilized for a control room mic input to avoid feedback from the cue speaker. When this option is enabled, the cue button is automatically reprogrammed to act as a cough button (hold-to-mute) for that input.

Install jumper **M** for no cue on input A.

Default is no jumper; cue in input A.

Install jumper **L** for no cue on input B.

Default is no jumper; cue in input B.

2.2.8 Off (Ready) Lamp Options

These jumpers allow for local (console) or remote (source) control of the channel off (ready) lamp via the remote control connector.

Install jumper **X** between the left and middle header pins for input A local Off lamp control.

Install jumper **X** between the middle and right header pins for input A remote Off lamp control.

Default is left and middle pins jumpered; local off lamp control.

Install jumper **W** between the left and middle header pins for input B local Off lamp control.

Install jumper **W** between the middle and right header pins for input B remote Off lamp control.

Default is left and middle pins jumpered; local Off lamp control.

See Illustration B-1, Pg16

2.2.9 Analog/Digital programming

Software Tip

Three-pin Jumper **Z** must be installed between the middle and upper pins in the Millenium Digital console, on every channel. This communicates channel on/off status to the console processor.

2.2.10 Remote Control Connector

A 15-pin D connector is provided on the Six Channel Control Board for each channel to access all remote functions.

All control (input) functions are activated via a momentary pull-to-ground, except the “cough” function, which must be held to +15V. All control output functions are open lines which go low when the function is activated. Lamp drivers are current-sinking inputs.

Two modes of remote control functionality are available via recently supplied PROMS. These modes are selected via the installation of jumper JU-213. In the default mode (JU-213 not installed,) remote control cue for IFB applications is provided. With JU-213 installed, “Classic” remote controll functionality, indentical to previous PROM versions is provided.

Refer to Illustration B-2 and B-3 for a pin-by-pin reference descriptions and wiring diagram.

Use the included 15-pin D connector ribbon extenders to plug in the mating D connectors external to the console, as internal clearance for these connectors is not available inside the console.

2.2.11 Optional Remote Control Board

Radio Systems’ optional Remote Board (RS Part # REMOTE) connects to the remote control connector and provides the user with programmable relay interface for channel remote control outputs and opto-isolated input to channel on/off and off lamp functions. Consult the interface option section for more details and pin-out and wiring diagrams.

2.3 Monitor Control Board

One monitor card (RS Part #10887) is installed on the right-hand side of the console front panel. It provides all monitor and clock switching and logic functions.

Software Tip

The monitor board also provides eight uncommitted, illuminated momentary switches for remote control of source equipment. These switches and LED’s are connected to and read by the processor on the digital output board. The processor may be set, via software screens, for various push-on / push-off momentary and switch interlock states. The Eight Position Switches may also be programmed to control utility bus main/ alternate configuration switching. Consult the “Eight Position switches” page in the software section of this manual for more information.

Connectors J-39 and J-43 on the digital output board are provided to interface with the console four source switcher option board (RS Part # ROUTER) and console intercom board (RS Part # INTERCOM). Consult the interface option section for more information.

See Illustration B-1, Pg16

Illustration B-1
Six Channel Control Board Jumper Settings for Millenium Digital Consoles

Part # 18522

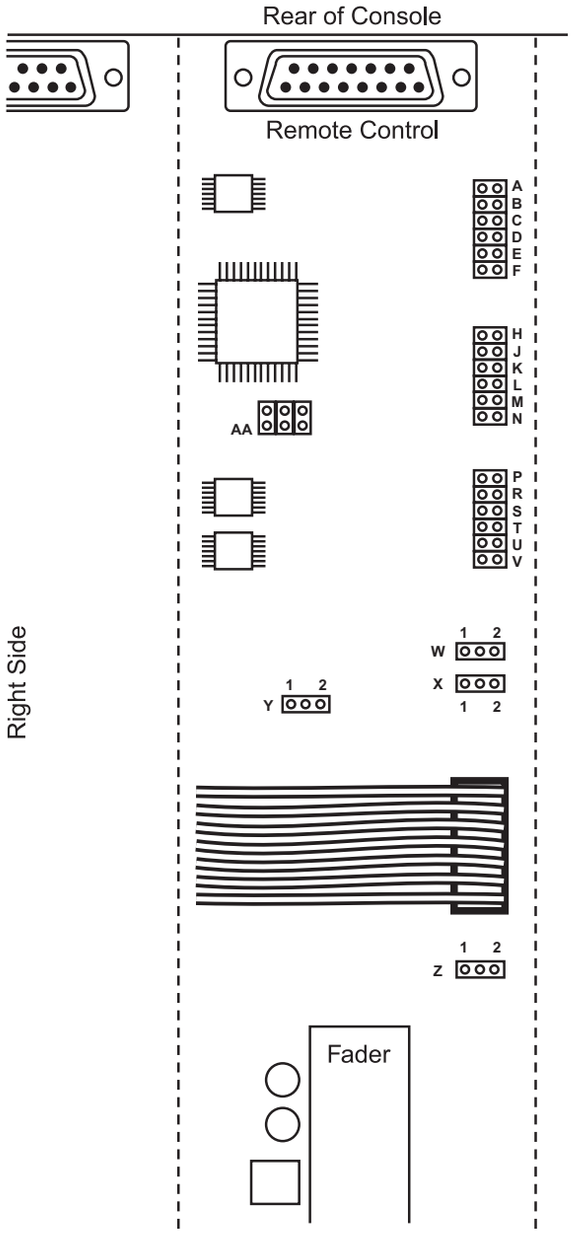

Front of Console
Input Control Board (Channel One Shown)

Board Location*	Channel Logic Jumpers
A	Install for fader start (special order fader required)
B	Install for remote B start and stop commands to control the remote outputs
C	Install for input B to hold and remove for input B to pulse the remote pulse/hold outputs
D	Install for remote A start and stop commands to control the remote pulse/hold outputs
E[R]	Install for "classic" remote control protocols
F[Q]	Install to disengage cue when channel is turned on
H	Install for input A to hold and remove for input A to pulse the remote pulse/hold outputs
J[Q]	Install for cue to follow the on/off mode ("Auto-Cue")
K[Q]	Install for cue on fader detent (special order fader required)
L[Q]	Install for no cue in input B (cue switch is now cough for input B)
M[Q]	Install for no cue in input A (cue switch is now cough for input A)
N	No Connect in Digital Consoles
P	Install for Input A mute 2
R	Install for input B mute 2
S	Install for timer reset with input A
T	Install for input A mute 1
U	Install for timer reset with input B
V	Install for input B mute 1
W	**Input B stop lamp local/remote jumper. Jump pin 2 to center pin for local console lamp control** (Jump pin 1 and center pin for remote lamp control)
X	**Input A stop lamp local/remote jumper. Jump pin 2 to center pin for local console lamp control** (Jump pin 1 and center pin for remote lamp control)
Y	**Jumper must be installed between pin 2 and center pin for cue bus lamp normal operation**
Z	**Jumper must be installed between pin 2 and center pin for digital console operation**

Notes:

Items in bold are factory default jumper settings.

See following page for remote control connector pin-outs.

Consult section 2.2 for a detailed explanation of control programming and functions.

[Q]Cue Options - Consult manual section 2.2.6 and 2.2.7 for various cue modes and operational descriptions.

[R]Remote Options - See illustration B-2 and B-3 for remote control options, settings and wiring.

Illustration B-2
Remote Control Wiring - with remote cue available for IFB

(for console models shipped after 10/15/10 with control prom PN: 18407)

Note: Jumper E on Input Control Board must be removed to initiate this mode of remote control (this is factory default setting)

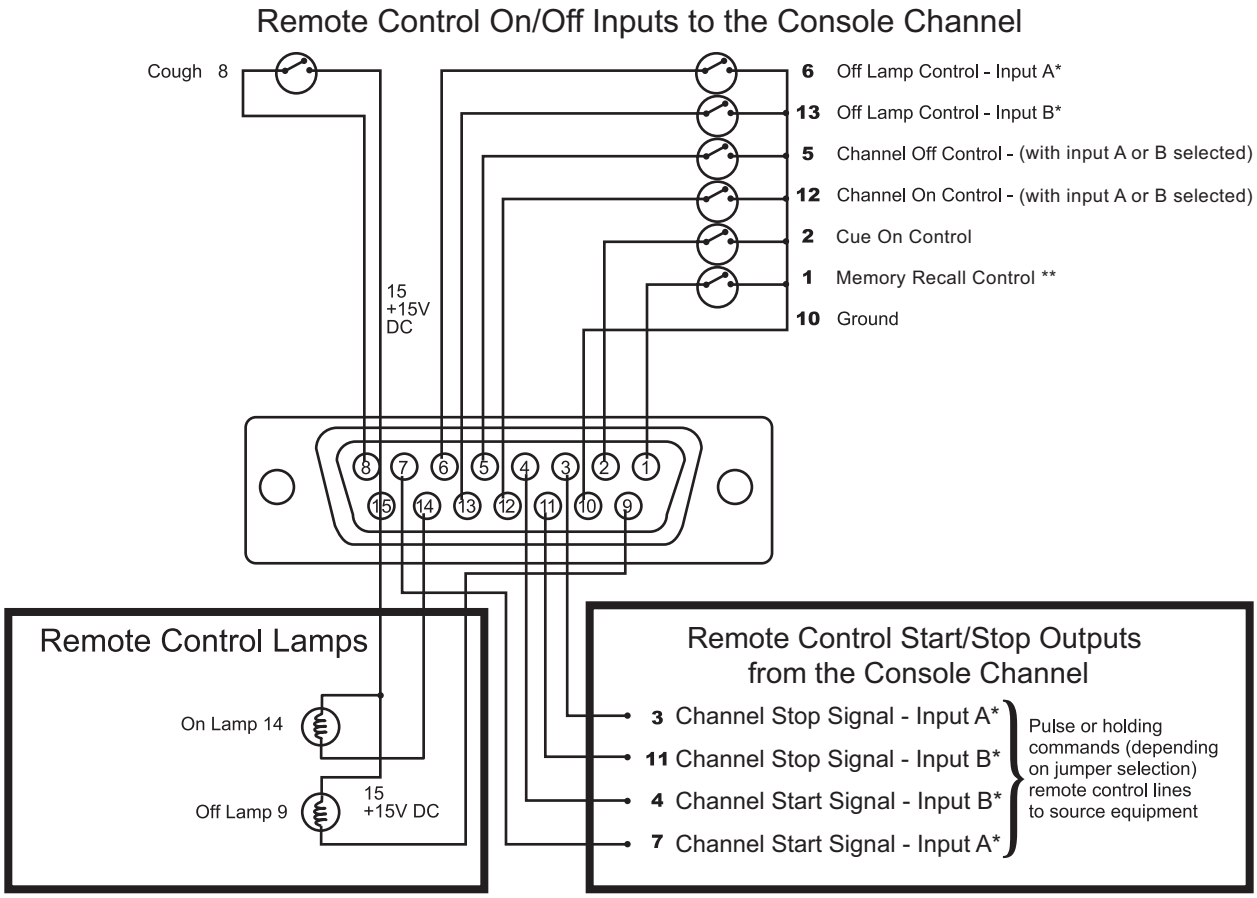

Functions Descriptions

Pin #	Function
1	Input to engage channel memory recall **
2	Input to engage the cue mode when either input A or B is selected
3	Output from the console to **stop** a source if input A is selected
4	Output from the console to **start** a source if input B is selected
5	Input to turn the console channel **off** when either input A or B is selected
6	Input to turn the console channel **off** Lamp Control - Input A
7	Output from the console to **start** a source if input A is selected
8	Holding input to turn the console channel **off** (cough function)
9	Remote channel **off** lamp
10	Ground
11	Output from the console to **stop** a source if input B is selected
12	Input to turn the console channel **on** when either input A or B is selected
13	Input to turn the console off lamp **on** if input B is selected
14	Remote channel **on** lamp
15	+15V

Notes

* These functions require programming on the input control card. See preceding page for details.
** "Memory Recall" engages the channel powerup of stored channel functions. See manual section 2.2.1 for details.
Control inputs to the console (pins 1,2,5 & 12) require a momentary contact to ground to activate.
Lamp Control inputs to the console (pins 6 & 13) require a holding contact to ground to activate.
Control outputs from the console (pins 3,4,7 & 11) are open collector lines which go low (to ground) when activated.
The cough button (pin 8) requires a holding connection to +15 volts (pin 15) for the duration of the function.

Illustration B-3
Remote Control Wiring - “Classic” Version

(for console models shipped after 10/15/10 with control prom PN: 18407)

Note: Jumper JU213 on Input Control Board must be installed to initiate this mode of remote control

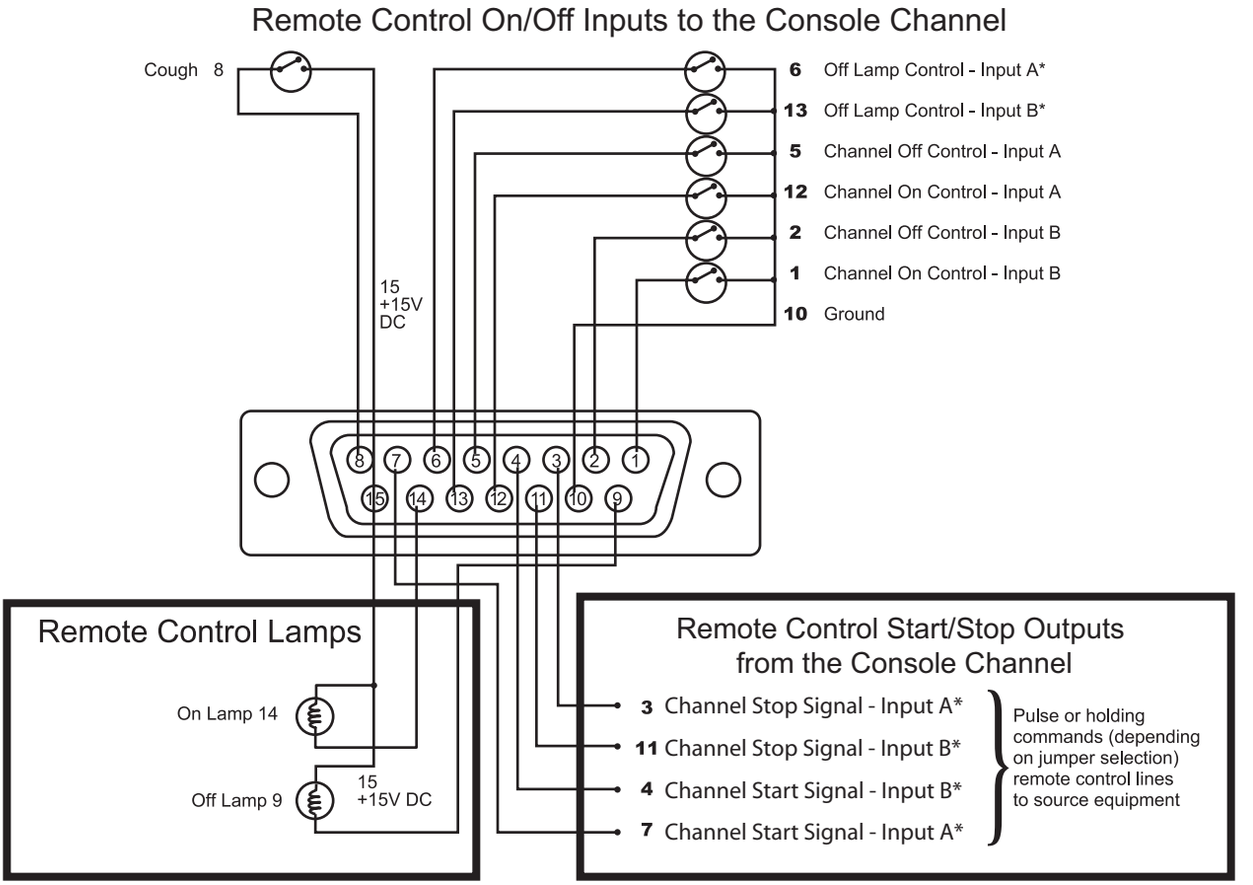

Functions Descriptions

Pin #	Function
1	Input to turn the console channel **on** if input B is selected
2	Input to turn the console channel **off** if input B is selected
3	Output from the console to **stop** a source if input A is selected
4	Output from the console to **start** a source if input B is selected
5	Input to turn the console channel **off** if input A is selected
6	Input to turn the console channel **on** if input A is selected
7	Output from the console to **start** a source if input A is selected
8	Holding input to turn the console channel **off** (cough function)
9	Remote channel **off** lamp
10	Ground
11	Output from the console to **stop** a source if input B is selected
12	Input to turn the console channel **on** if input A is selected
13	Input to turn the console off lamp **on** if input B is selected
14	Remote channel **on** lamp
15	+15V

Notes

*These functions require programming on the input control card. See preceding page for details.
Control inputs tot he console (pins 1,2,5 & 12) require a momentary contact to ground to activate.
Lamp Control inputs to the console (pins 6 & 13) require a holding contact to ground to activate.
Control outputs from the console (pins 3,4,7 & 11) are open collector lines which go low (to ground) when activated.
The cough button (pin 8) requires a holding connection to +15 volts (pin 15) for the duration of the function.

Six Channel Audio Mother Board

3.1 Input Connectors

The Millenium digital console may be ordered factory equipped with either 5-pin removable barrier strip connectors or RJ-45 style connectors. RJ-45 connectors are wired to the StudioHub+ audio standard. Both connectors accommodate either mono or stereo balanced or unbalanced analog connectivity or balanced AES-EBU or unbalanced S/PDIF connections. Illustrations C-3 and C-4 show the location of these various input audio connectors.

3.2 Input Configurations

One six-channel input board is provided per six console inputs and mounted on the lower inside pan of the console. The Six Channel Input Audio board houses up to six plug-in analog or digital daughter cards. These plug-in cards configure both inputs of any channel to accept either analog (stereo mic thru line level) or digital (stereo AES-EBU or S/PDIF) signals. Cards can be plugged into any slot and no hardware or software programming is necessary for the console to “recognize” an analog or digital card.

3.2.1 Input Wiring

Every input, from mic thru high level, wires to the input connectors. One 5 pin connector or one RJ-45 connector is provided for each channel “A” input and another is provided for each “B” input. Each connector handles left and right balanced audio or stereo AES-EBU or S/PDIF digital audio from the source equipment.

The connectors also provide a grounding point for the audio inputs. Grounds should be connected at either the console or equipment and not at both ends, to avoid ground loops. The console is usually used as the grounding reference point.

See section 1.4.6 “grounding and shielding” in the ‘Installation, Wiring and Operations” section for more information.

3.3 Analog Daughter Cards

The universal, dual input, analog plug-in cards accommodate stereo or mono, balanced or unbalanced, low or high (bridging) impedance, mic thru line level inputs. Any combination of these signals can be applied to the A or B inputs. Various wiring configurations and jumpers program the cards to accept these different signal types.

3.3.1 Unbalanced Analog Audio

If an unbalanced analog audio source is to be connected to the console, single conductor shielded cable or two conductor shielded cable with a foil shield around each conductor should be used. The audio should be connected to the + input, while the shield should be connected to both the - input and Ground. In this case, the shield is connected at both ends of the cable.

3.3.2 Analog Mono Inputs - for Mic and Line Level

To connect an analog input so that it feeds both the left and right channels, connect the + Left Input to the + Right Input, and connect the - Left Input to the - Right Input. The source will not be loaded, due to input impedance of 20K ohms for high-level inputs and 4.5K ohms for microphone inputs. Inputs jumper programmed for mic level are automatically set to mono with the left channel summed to both left and right.

3.3.3 Input Sensitivity

Input levels can be independently programmed for A&B inputs via on board jumpers. Jumpers are provided for 9 mic gain settings, as well as +10 and +20 gain boost to line level inputs to accommodate low-level (consumer type) outputs without the need for external matching amplifiers. Consult illustration C-1 for jumper locations.

Software Tip Input levels can be pre-trimmed or boosted in console software in .1 dB steps over a 25 dB range. Consult the “Channel Settings” page in the “Software” section of this manual for more information.

3.3.4 Phantom Power

A mic may be supplied with Phantom power by installing jumper JU-12 on the Analog daughter plug-in card and a jumper on pins 4 & 5 on J-7 on the digital output card. Consult illustrations D3 or D4 for jumper locations.

Note that the console provides +15 volts phantom mic power, which is suitable for most microphones. Consult the factory if a different (higher) phantom voltage is required.

3.4 Digital Daughter Cards

These universal, dual input, digital plug-in cards feature on-board sample rate conversion and accommodate stereo, balanced or unbalanced, 32 thru 92 KHz AES-EBU or S/PDIF audio. Any combination of these signals can be applied to the A or B inputs. Various wiring configurations and jumper programming exist on the cards to accept these different signal types.

3.4.1 Unbalanced Digital Audio

If an unbalanced digital audio signal (S/PDIF) is to be connected to the console, wire the coaxial center to the Left channel + pin, and the coaxial shield to the - and ground pins. Note that JU-1 (for Input B) and JU-2 (for Input A) must be inserted for 75 ohm (unbalanced S/PDIF) termination.

3.5 “Patch-Point” Connections

All hard-wired patch points previously available on Analog Millenium consoles have been replaced with software configurable Utility buses. Consult the “Utility Buses” page in the “Software” section of the manual for more information.

Illustration C-1
Analog input plug-In Board p/n 15303

This board provides two stereo analog inputs
Mic thru line level are jumper selectable for each individual input.
This board can be plugged into any slot on the 6 input motherboard

Millenium-D Analog Plug-In card p/n 15303

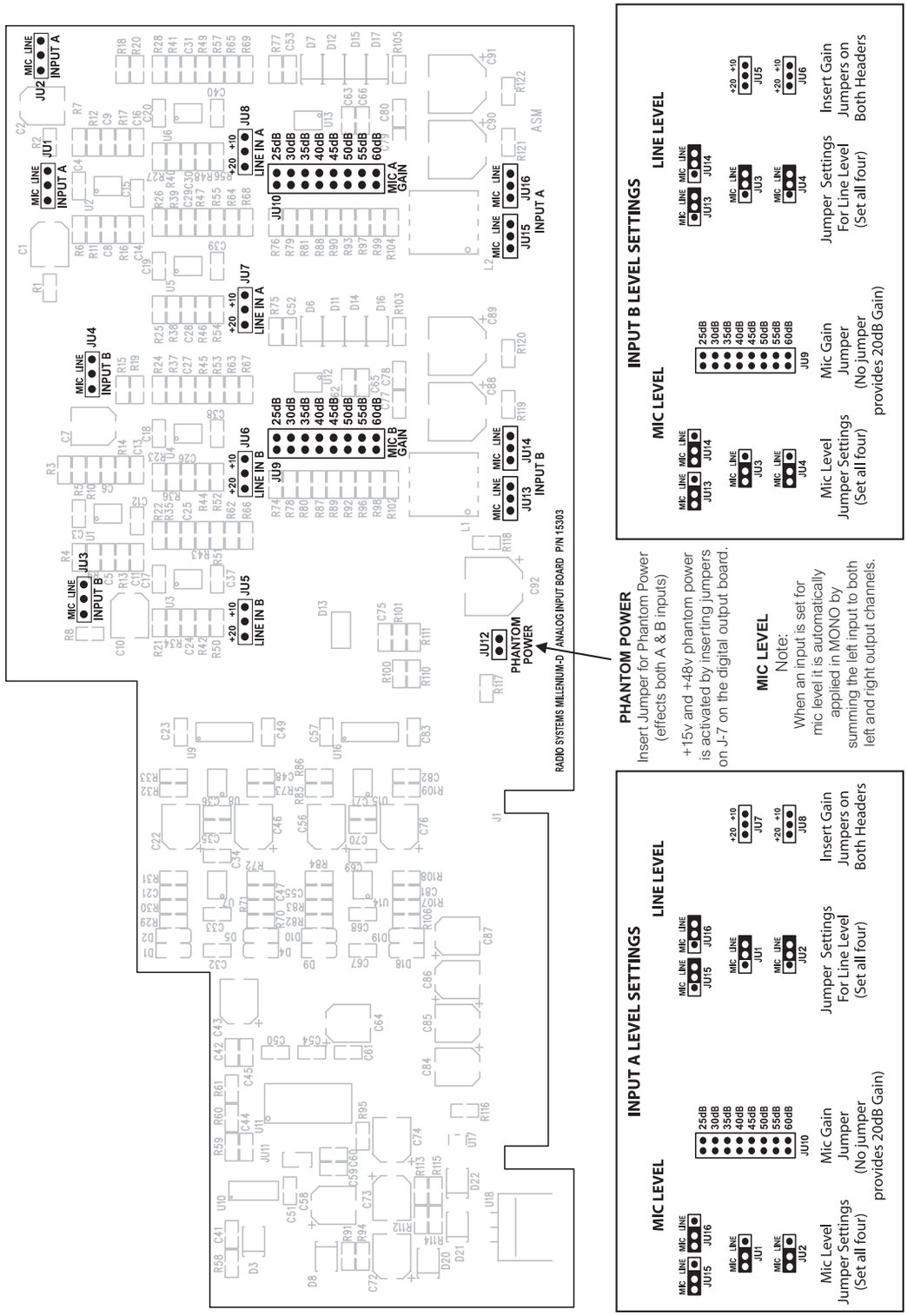

Illustration C-2
Digital Input Plug-In Board 15304

This board provies two AES/EBU or S-P/DIF digital inputs.
On-board automatic sample rate conversion accommodates any source sample rate.
This board can be plugged into any slot on the 6 input motherboard.

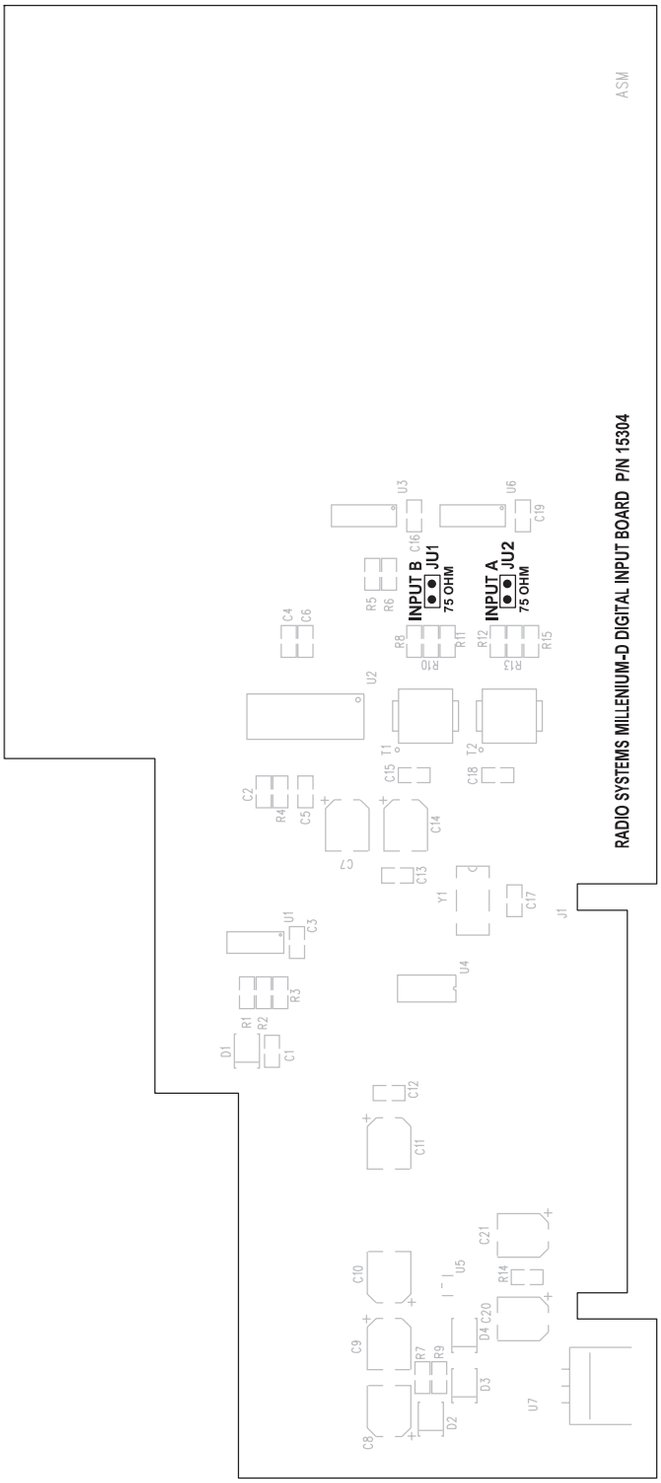

TERMINATION SETTINGS

INPUT A

JU2

Insert Jumper
for S-P/DIF 75 Ohm Termination
(without jumper termination
is 110 Ohms for AES-EBU digital)

INPUT B

JU1

Insert Jumper
for S-P/DIF 75 Ohm Termination
(without jumper termination
is 110 Ohms for AES-EBU digital)

Illustration C-3

6 INPUT MOTHER BOARD

RJ-45 CONNECTOR VERSION p/n 14905

Description

This board houses 6 channels of **DIGITAL** or analog input cards. Cards can be inserted in to any slot.
This RJ-45 version of the board utilizes StudioHub+ standard pin outs for all analog and **DIGITAL** audio I/O.
One of these boards per each 6 console channels mounts on the lower right of the console.

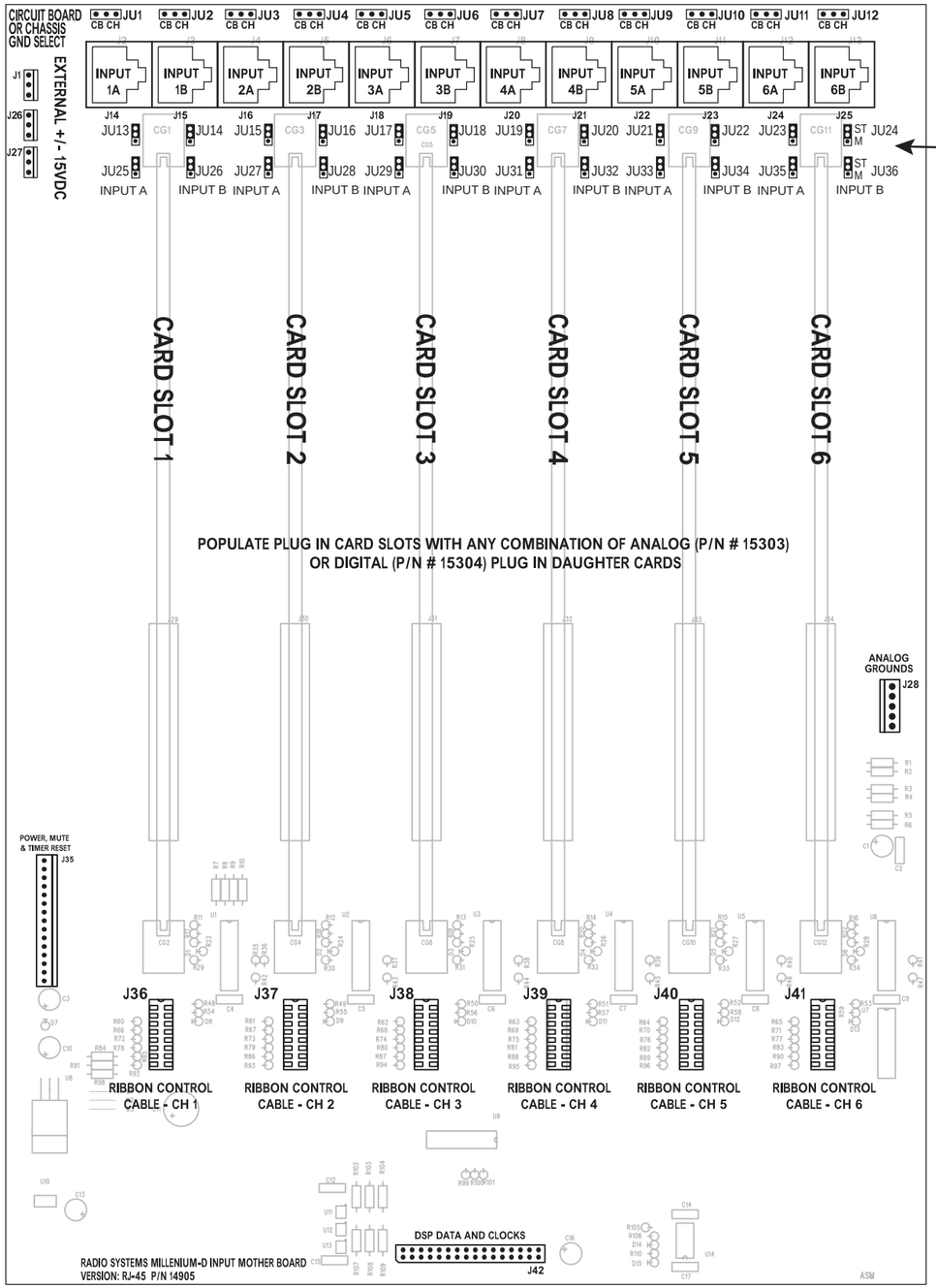

CARD CONNECTIONS & SETTINGS

STEREO/MONO INPUT JUMPERS

STEREO
MONO

STEREO
MONO

Install both upper jumpers for stereo inputs (default).
Install both lower jumpers to mono a stereo input.

AUDIO INPUT

StudioHub+ Pinout Chart

Channel	Color Pair	RJ-45 Pins
L+ / AES+	Wht/Org	1
L- / AES-	Org/Wht	2
R+	Wht/Grn	3
R-	Grn/Wht	6
nc	Wht/Blu	5
GND	Blu/Wht	4
15V-	Wht/Brn	7
15V+	Brn/Wht	8
Shield	Wht/Slt	Shield
Shield	Slt/Wht	Shield

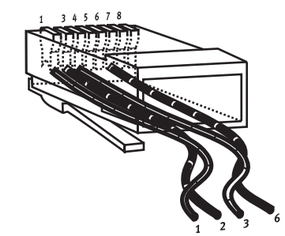

INPUT GROUNDING JUMPERS

JU1 - JU12
CB
Jumper Setting
For Circuit Ground

JU1 - JU12
CH
Jumper Setting
For Chassis Ground

(See Manual
Section 1.4.6
for Grounding Information)

EXTERNAL +/- 15VDC

+15 Volts
GND
-15 Volts

J1, J26, J27

(Connectors provided to
power various optional
and external accessories)

Illustration C-4

6 INPUT MOTHER BOARD

5 PIN CONNECTOR VERSION p/n 14904

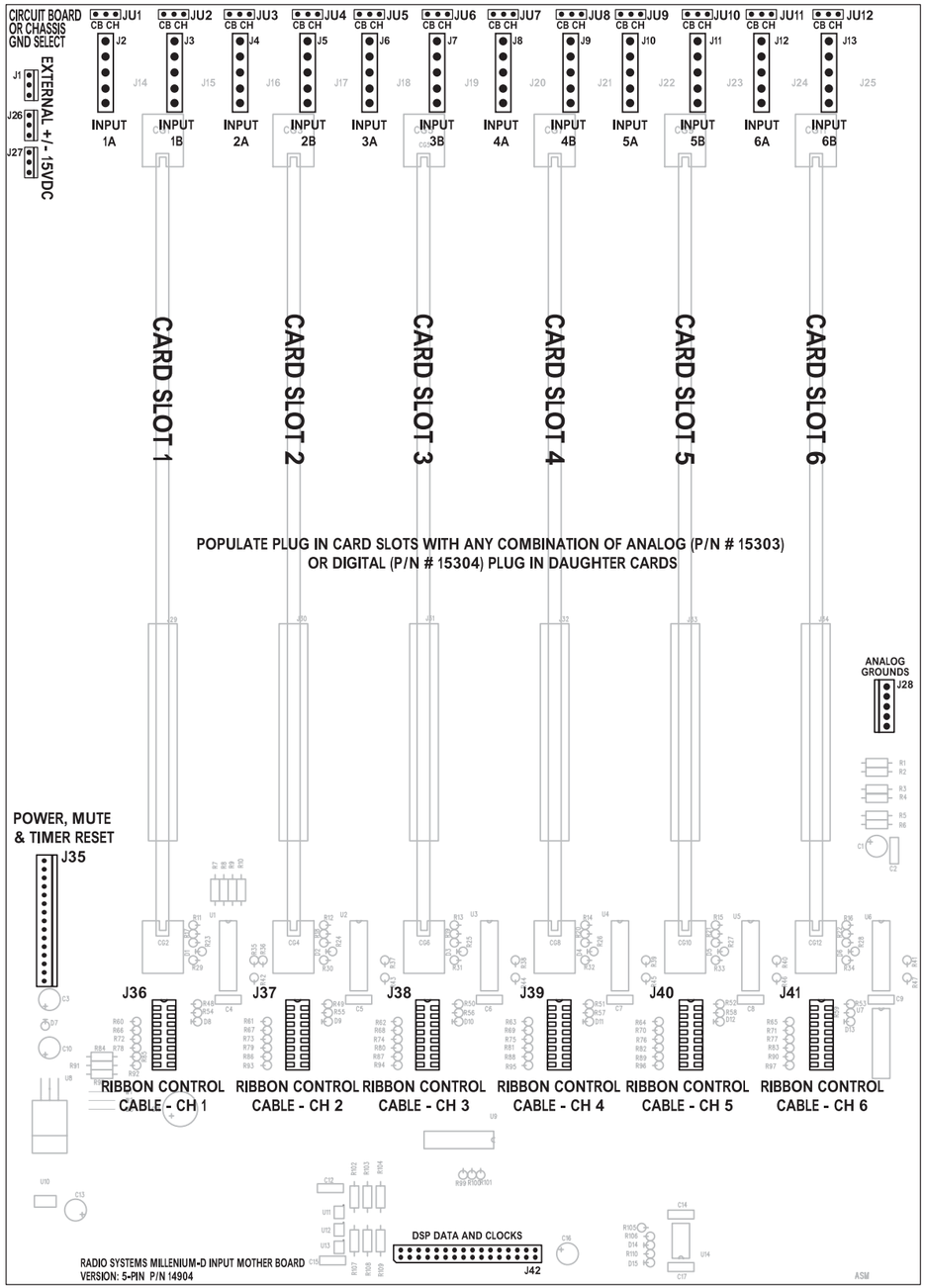

Description

This board houses 6 channels of **DIGITAL** or analog output cards. Cards can be inserted in any slot.
This 5-pin connector version of the board utilizes 5-pin removeable barrier strip connectors for all analog and **DIGITAL** audio I/O.
One of these boards per each 6 console channels mounts on the lower right of the console

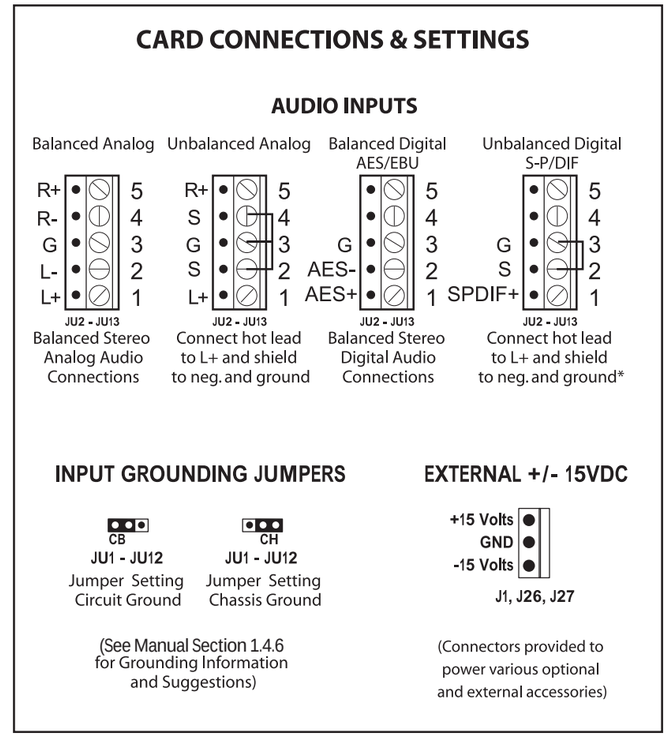

*Insert digital plug-in card jumper JU-1 (for input B) and JU-2 (for input A) for 75 Ohm termination.

Output Boards

4.0 Overview

In the Millenium digital console two circuit boards provide all audio outputs and certain other related functions. The two large circuit boards are mounted on top of each other and are located on the right-hand inside pan of the console. The lower board provides most of the analog output functions and is identical to the circuit board utilized in Millenium analog consoles. The upper board provides mostly digital functions. A metal shield mounts between the boards for interference isolation. Trim pots on the lower board are accessible through holes with silk-screened legends in the upper board. I/O connectors on the lower board can be accessed in the rear where the upper board is cut back.

Millenium digital console output boards may be ordered factory equipped with either 5-pin removable barrier strip connectors or RJ-45 style connectors. RJ-45 connectors are wired to the StudioHub+ audio standard. Both connectors accommodate either mono or stereo balanced or unbalanced analog connectivity or balanced AES-EBU or unbalanced S/PDIF connections. Illustrations D3 and D4 show the location and pin-outs of these various audio connectors.

4.1 Analog Output Board

The Analog (lower) circuit board provides the following console functions:

Line output amplification

Cue amplification

Headphone amplification

External Inputs

Monitor sends Meter and peak LED functions

Level sets for all functions

Muting and timer reset functions

Power supply interface

Talk back circuitry

4.1.1 Program and Audition Analog Outputs

The program and audition outputs provide identical stereo performance, are active balanced, and factory calibrated, with a 600 ohm load, to provide +4dBm when the front panel VU meters read “0” VU. This will provide in excess of 20dB of headroom. Adjustments for output levels, meter calibrates, and peak LED trip points are provided on the Analog Output Board (with access to these controls via holes on the upper digital output board,) so that other output levels maybe set.

The outputs will drive a 600 ohm load or higher. The outputs are connected via either a five position screw type barrier strip or RJ-45 connectors that are mounted onto headers J30 (Program), and J29 (Audition), located on the Analog Output Board.

Software Tip

Analog output levels for the Program, Audition and Tel buses can be pre-trimmed or boosted in console software in .1 dB steps to a maximum of +4 dB out. Consult the “Output Level” page in the “Software” section of this manual for more information.

When hand wiring the 5-pin connectors, is recommended that two conductor shielded cable, or two pair shielded cable be used in wiring all balanced audio inputs to the console. To minimize RF interference and ground loops, the shields should be tied to ground only at one end of the cable. See manual section 1.4.6 “Grounding and Shielding” for more detailed information.

If an unbalanced console output is required, single conductor shielded cable or two conductor shielded cable with a foil shield around each conductor should be used. The audio should be taken from the + Output terminal, while the shield should be connected to Ground. In this case, the shield is connected at both ends of the cable. There should be no connections to the - Output. In this configuration, the console output will provide -2dBm into a 600 ohm load when the front panel VU meters read “0” VU.

4.1.2 “TEL” Output

The “TEL” Output is connected via a five pin screw type barrier strip or RJ-45 connector labeled “TEL” on header J33, on the Output Board.

The two “TEL” Outputs provided are in parallel, from the same amplifier. The combined load on the amplifier from both mono sends should be no less than 600 ohms.

In other aspects, the performance and connections to the “TEL” Output are identical to the program and audition outputs.

4.1.3 External Monitor and Headphone Inputs

Four balanced, stereo, high impedance (4.7K ohm) inputs are provided which feed both the headphone and the monitor amplifiers. These inputs are connected to headers J19 (external input 1), J20 (external input 2), J25 (external input 3), and J26 (external input 4) on the Output Board. Connections are made via five position screw type barrier strips or RJ-45 connectors that are mounted onto the headers.

When wiring the 5-pin connectors, two conductor shielded cable with a foil shield around each conductor should be used.

These inputs are intended mainly for air signal monitors, or for the connecting of other external monitor sources. Input level trims for each of these inputs are provided on the Analog Output Board.

4.1.4 Headphone Outputs

Two headphone outputs are provided. The first is available at a stereo, quarter inch, phone jack which is factory mounted to the front panel. This output is capable of driving 8 ohm or greater loads. D0 NOT USE MONO HEADPHONES. The output signal is selected by the front panel headphone or monitor switches and level adjusted by the front panel headphone level control.

The second headphone output is stereo, balanced, and high level (lv RMS typical). It will drive loads of 2K ohms or greater. This output, which is intended for connection to an external headphone amplifier, follows the input selection switches but is not affected by the front panel headphone level control.

Connections are made via a five position screw type barrier strip or RJ-45 connectors on Headphone header J11 on the Analog output Board.

Single conductor shielded cable or two conductor shielded cable with a foil shield around both conductors should be used.

4.1.5 Monitor Sends

Three stereo, balanced, high level (lv RMS typical) are provided. Each output will drive loads of 2K ohms or greater. The outputs are dimmed.

Monitor (controlled by Mute 1), Muted Monitor (controlled by Mute 2), and Unmuted Monitor. All outputs follow the monitor selection switches but only the Dimmed Monitor is affected by the front panel monitor level control. Connections are made via five position screw type barrier strips or RJ-45 connectors that are mounted onto the monitor headers on the Output Board as follows.

Output Board Header	Monitor Output
J12	Dimmed Monitor (Mute 1)
J15	Muted Monitor (Mute 2)
J16	Unmuted Monitor

When wiring the 5-pin connectors, single conductor shielded cable or two conductor shielded cable with a foil shield around both conductors should be used.

All monitor outputs are intended to drive external monitor amplifiers. The Dimmed Output, controlled by Mute 1, (which also mutes the Cue speaker) is intended to feed the control room monitor amplifier where the console is located. When the Mute 1 bus is enabled, the output from the Dimmed Output will be reduced to a level set by VR13 located on the Output Board. This level may be set to maximize (for full muting) or, alternatively, to a level just below the feedback threshold of the speakers.

The Muted Output is intended to feed any other room which that contains microphones connected to the console.

If it is desirable to feed all studios from a common amplifier, this amplifier should be fed from the Unmuted Monitor Output. External relays driven by the muting contacts on header J7 could then be used to provide the necessary muting of the signal.

4.2 Digital Output Board

The digital (upper) circuit board provides the following console functions:

System clocks and crystal

Digital mixing

System processor and non-volatile memories

RS-232 system interface

Parallel audio bus interface

Digital line outputs

Digital utility bus outputs

Analog utility bus outputs

8 position switcher logic processing and interface

Power supply I/O

4.2.1 Digital Program Outputs

All program outputs are simultaneously available in Analog format (on the lower Analog output board) and digital format on the digital output board connectors J6, J14, J22, J27. See illustration O-1 and O-2 for connector locations.

Software Tip

Digital output levels for the Program, Audition and Tel buses can be set in console software in .1 dB steps to a maximum of +4 dB out. Consult the "Output Level" page in the "Software" section of this manual for more information.

4.2.2 Digital Utility Outputs

Utility bus outputs are simultaneously available in digital format on the digital output board on connectors J5, J13, J21, J26, and in Analog format on the digital output board on connectors J29, J34, J37, J40. See illustration O1 and O2 for connector locations.

Analog outputs are factory calibrated and set identically to the main output buses (see section 4.5.1 for details.)

When using utility outputs as STEREO pairs, outputs 1/6, 2/7, 3/8, 4/9, 5/10 must be used as left/right pairs, because this is how the outputs appear on the output connectors.

Software Tip

Analog and digital output levels for the 10 Utility buses can be set in console software in .1 dB steps to a maximum of +4 dB out. Buses can also be configured to provide a main and alternate mix of any combination of input channels, pre or post channel fader or on/off switch. Consult the "Output Buses" and "Utility Buses" pages in the "Software" section of this manual for more information.

4.2.3 RS-232 Connectivity

RJ-45 connectors J20 and J15 provide main and auxiliary RS-232 connectivity for console serial (software) control. See illustration O1 and O2 for connector locations.

Consult the "Communications" page in the "Software" section of this manual for main/aux serial port assignment.

Consult the "Serial Comm Port" page in the "Software" section of this manual for PC comm. port assignment.

4.2.4 Clock Rate (Digital Sync.)

The console internal sample rate and digital output sample rate (which are always the same) are internally generated and crystal set at a factory default of 44.1 kHz. The rate can be changed by exchanging crystal Y2 and re-setting jumper JU-10 on the digital output board. Contact the factory to order crystal Y2 with a different sample rate.

External (house sync) in AES/EBU format can be feed to the console via RJ-45 connector J-28. LED D-9 illuminates to indicate external sync. When external sync is present, the console will default this external reference. If the external sync is removed the console will automatically revert to the internal crystal reference. Consult illustration O-5 or O-6 for connector locations for internal location and pin outs.

4.2.5 Eight Position Switcher

Eight accessory switchers are provided on the right hand side of the console upper control panel for optional user control of external equipment, console accessory boards and mix-minus sends. The switches and their associated LED indicators are wired directly to the digital output board and read by the digital processor. Connections for accessory boards and special external switching are then made directly to connectors J39 and J43 on the digital output board. Consult diagrams O1and O2 in the digital output board section for more information.

Consult the “8 Position Switches” page in the “Software” section of this manual for optional switch functionality assignment.

4.3 Control Wiring

4.3.1 Mute and Timer Reset Bus Connections

A five position quick-connect type barrier strip is connected to Mute/Timer header J7 on the Output Board to provide external mute and timer reset functions. Note that clearance may not exist for this connector to be installed with side wire entry. In this case the connector may be plugged using it’s side-entry pins and with the wires entering from the top.

The bus outputs are open collector current sinking outputs, maximum +24vdc open circuit voltage, 80ma. If the buses are to drive external relays, install EMF suppression diodes across the relay coils. Do not exceed 150ma draw from the +15v supply.

An interface relay is optionally available from Radio Systems. Illustration D3 shows the wiring of this relay for external tally lights.

The Timer Reset Bus activates only during the first 100ms after a mixing channel, with its Timer Reset Jumper(s) installed, is placed in the “on” mode. Repeated depressing of the “on” switch after the mixing channel has turned “on” will result in additional pulses on the Timer Reset Bus.

4.4 Talk Back Connections

The talk back circuit has two sections, send and receive. The send section will output any signal applied to its input when the front panel Talk Back Switch is depressed. Send and receive signals are normally wired to External Cue Bus connector J37. Trim pots on the Analog Output Board (accessible through holes in digital output board) are provided to set the external cue input level and talk back output level.

Talk back connections are made via 2 five position terminal strips, titled “To Talk Back Output” header J36 and “Talk Back Input” header J37 on the Analog output Board.

Software Tip

Under normal applications, the output of a Utility bus configured for pre-fader pre on/off switch is wired to the talk back send input terminal on J37. This is accomplished by wiring the selected Utility bus output channel to terminals 1 & 2 of the Talk Back connector.

Talk Back Output connector J36 also contains terminal 4 labeled “CTL”, which is pulled low whenever the front panel talk back switch is depressed. This is useful for switching external intercom or control circuits. It may also be used to remote trigger the console front panel Talk Back switch.

Illustration D-4 shows how this configuration would be used to wire two Millenium Consoles for talk back communication utilizing a utility bus and the cue circuit external inputs.

4.5 Intercom Kit

The talk back system can also be used to communicate with up to 4 2-way speakers in studios or control rooms that do not have Millenium Consoles. For this application, Radio Systems provides an intercom kit. Consult the Interface Options and Accessories section of this manual for detailed information.

4.6 Internal Adjustments and Level Calibration

The following level trim adjustments are available on the Analog Output Board.

1. mix bus output level
2. VU meter “0”
3. peak LED trip point
4. input level for external monitor inputs
5. input level for external cue bus input
6. distortion adjustment for all VCAs

The following level trim adjustments are available on the Digital Output Board.

1. Utliity bus analog output level

Software Tip The following level trim adjustments are available via console software set-up

1. Program buses analog output level trim
2. Program bus digital output levels
3. Utility bus analog output level trim
4. Utility bus digital output levels
5. Utility bus digital output levels

The console was factory calibrated as follows, and will not require recalibration unless alternate levels are desired.

1. With a +4dBv input and the fader set to the “0” position, the console will provide +4dBm output
   into a 600 ohm load. In addition, the VU meters will read 100% or 0 VU.
2. The peak LED trip point was calibrated to illuminate the LED when the peak output level reaches +2 dBv.
3. The external monitor inputs were calibrated to provide a lv RMS output with a lv RMS input.

4.6.1 Program Bus Output Level Adjust

The console was calibrated at the factory for an output level of +4dBv, into 600 ohms, when the VU meters indicate “0”.

Software Tip Software level trims are factory default set for 0 db (no gain or boost.) See the “output level set” page in the software section for more information.

Perform the following steps on the Six Channel Audio Board to verify or change the calibration.

1. Select an Analag Input channel set for line-level gain.
2. Disconnect any inputs to the left or right A input.
3. Connect a l kHz, +4dBv, balanced sine signal to both the left and right A inputs.

Select input A, select all mix buses, turn the mixing channel “on”, and set the fader to “0”.

Perform the following steps on the Output Board.

1. If the console outputs will normally be terminated, place an equivalent termination onto each program and audition output. In addition, place a termination onto one of the Mono outputs.
2. Connect a high impedance, balanced voltmeter across the + and - Left program output.
3. Adjust the left channel output level trimmer so that the voltmeter indicates the desired output.
4. Move the voltmeter, and adjust the right program output, followed by the left audition output, right audition output and mono output.

4.6.2 VU Meter “0” Calibration

The console was calibrated at the factory for an output level of +4dBv, into 600 ohms, when the VU meters indicate “0”.

To calibrate the VU meter “0” indication:

1. Perform output level calibration as detailed previously.
2. Adjust the VU meter calibrate trimmers, located on the Output Board for a “0” reading on each meter.

Note: Six channel consoles share the same meters for program and audition monitoring. The front panel VU meter switch selects the signal to be displayed. Adjustment must be made with both switch settings.

4.6.3 Peak LED Trip Point Calibration

The console was calibrated at the factory for an output level of +4dBv, into 600 ohms, when the VU meters indicate “0”, and for a peak LED trip point of +2VU. To perform Peak LED Trip Point Calibration:

1. Perform output level calibration as detailed previously.
2. Perform VU meter “0” calibration as detailed previously.
3. Adjust oscillator to the desired peak LED trip point level (typically 0 to 3dB hotter).
4. Adjust the peak LED trip point trimmers to that the LEDs just illuminate.

Note: Six channel consoles share the same meters for program and audition monitoring. The front panel VU meter switch selects the signal to be displayed. Adjustment must be made with both switch settings.

4.6.4 External Monitor Input Level

There is a separate adjustment, located on the Output Board for each of the four stereo external inputs.

1. Connect a high impedance voltmeter to the unmuted monitor output.
2. Select a high level input, and reproduce the nominal level from a test tape, record or CD.
3. Turn the mixing channel “on”, select the program mix bus, and adjust the fader for “0” VU.
4. Depress the “program” monitor input switch.
5. Note the reading on the voltmeter.
6. Feed the nominal input level to any external input and select that monitor input switch.
7. Adjust the associated external input level trimmer until the voltmeter gives the same indication as in step 5.
8. Repeat steps 6 and 7 for all external inputs.

4.6.5 Cue Bus External Input Level

The level adjustment for the external cue buss input is located on the Output Board.

1. Connect a high impedance voltmeter to the external cue speaker terminals.
2. Select a high level input, and reproduce the nominal level from a test tape, record or CD.
3. Place the mixing channel into “cue”, and adjust the cue level control VR2 for normal listening level.
4. Note the reading on the voltmeter.
5. Feed the nominal input level into the external cue input.
6. Adjust the external cue input level trimmer until the voltmeter gives the same indication as in step 4.

Illustration D-1
Analog Output and Meter Board
5-Pin Connector Version p/n 14800B

Description

This board provides all main bus analog audio outputs, external inputs, muting and talk-back and monitor sends.
The board utilizes exclusively 5-pin removable barrier strip connectors for all audio I/O.
The board mounts on the console inside lower right, underneath the digital output board.

Connectors

J1 to Talk Back Control
J2 to Power Supply Out
J3 to Timer
J4 to Cue Speaker
J5 to Power Supply In
J6 to Power Supply In (2)
J7 to Muting & Timer Reset
J8 to Power Supply In
J9 to Monitor Selector Boards
J10 to Headphone Jack
J11 Ext. Phones
J12 Monitor Send (Mute 1)
J15 Monitor Send (Mute 2)
J16 Monitor Send (Unmuted)
J19 Ext. Input 1
J20 Ext. Input 2
J23 to Meters
J24 to Peak LED's
J25 Ext. Input 3
J26 Ext. Input 4
J29 Audition Out
J30 Program Out
J33 Telephone Out
J34 to Audio Ground Buss
J36 Talk-Back Output
J37 Cue/Talk-Back Input
J38 to Mix Busses

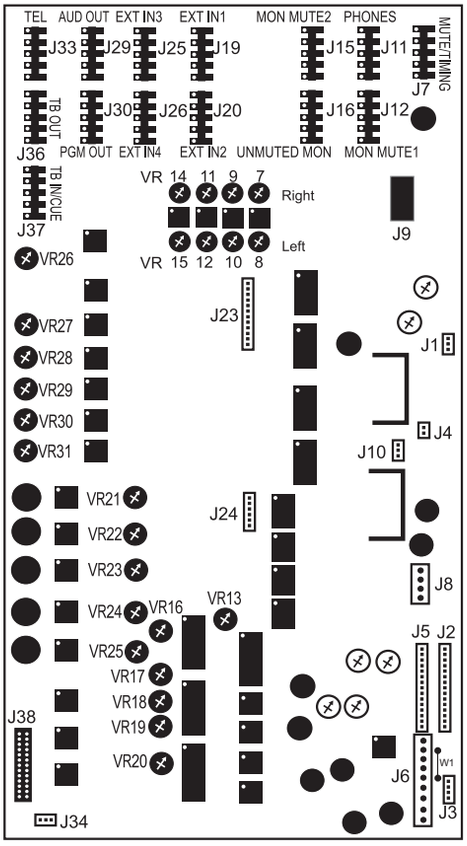

Trim Pots

VR7 Ext. Monitor Input 1 R
VR8 Ext. Monitor Input 1 L
VR9 Ext. Monitor Input 2 R
VR10 Ext. Monitor Input 2 L
VR11 Ext. Monitor Input 3 R
VR12 Ext. Monitor Input 3 L
VR13 Mute 1 Dimming
VR14 Ext. Monitor Input 4 R
VR15 Ext. Monitor Input 4 L
VR16 Peak LED Program R
VR17 Peak LED Program L
VR18 Peak LED Audition R
VR19 Peak LED Audition L
VR20 Peak LED Mono
VR21 Pgm Out L Level Set
VR22 Pgm Out R Level Set
VR23 Audition Out L Level Set
VR24 Audition Out R Level Set
VR25 Mono Out L Level Set
VR26 Talk Back Level Set
VR27 Meter Cal - Program L
VR28 Meter Cal - Program R
VR29 Meter Cal - Audition L
VR30 Meter Cal - Audition R
VR31 Meter Cal - Mono

W1 Jumper installed for digital use

Note- Access trim pots via silk-screen legend holes on the upper **DIGITAL** output board with the provided small screw driver.

Connectors

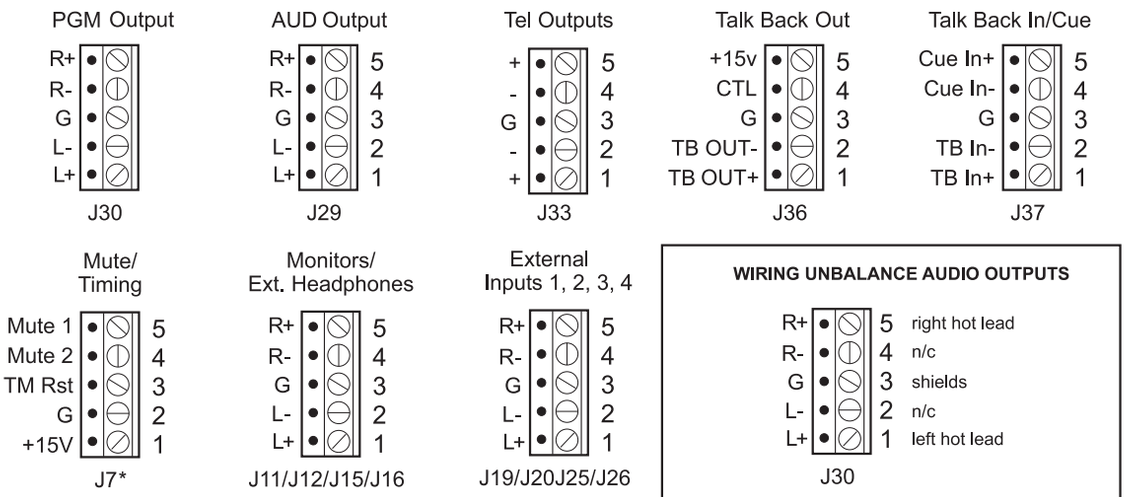

WIRING UNBALANCE AUDIO OUTPUTS

*Wire outputs to unbalanced equipment by connecting to the plus pins 1 and 5 and ground. Make no connection to negative pins 2 and 4.

*The support bracket for the upper **DIGTIAL** output board may prohibit plugging into J7 as illustrated. Plugging in this connector on its side (with wire entry holes pointed up) will allow installation.

** To use Talkback control pin (J36-4) to activate external replay

Illustration D-2
Analog Output and Meter Board
RJ-45 Connector Version p/n 15354B

Description

This board provides all main bus analog audio outputs, external inputs, muting and talk-back and monitor sends.
The board utilizes exclusively RJ-45 connectors with StudioHub+ standard pin-outs for all analog and digital audio I/O
The board mounts on the console inside lower right, underneath the digital output board.

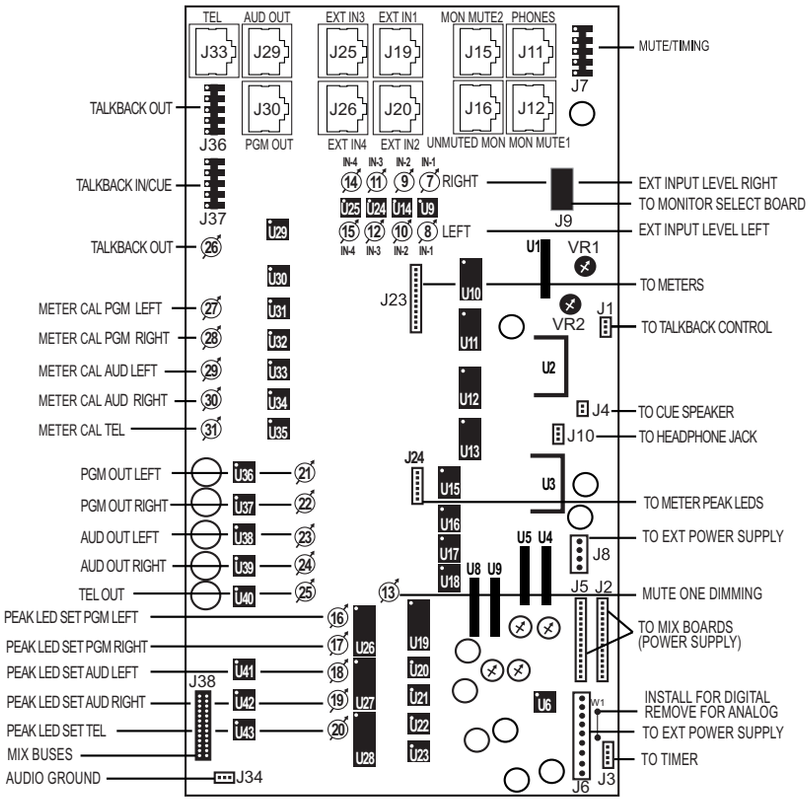

Note: Access trim via silk-screen legend holes on the upper DIGITAL output board with a small screw driver

Connectors

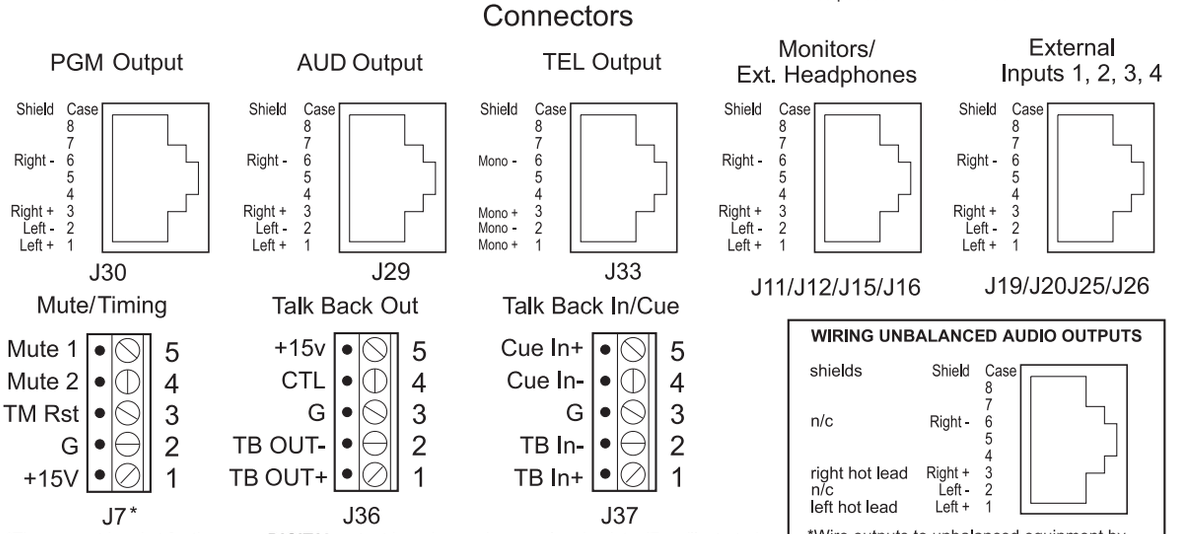

WIRING UNBALANCED AUDIO OUTPUTS

shields	Shield	Case
		8
		7
n/c	Right -	6
		5
		4
right hot lead	Right +	3
n/c	Left -	2
left hot lead	Left +	1

*Wire outputs to unbalanced equipment by connecting to the plus pins 1 and 3 and shield. Make no connection to negative pins 2 and 6

*The support bracket for the upper **DIGITAL** output board may obscure plugging into J7 as illustrated. Plugging in this connector on its side (with wire entry holes pointed up) will ease installation.

Access trim pots via silk-screen legend holes on the upper **DIGITAL** output board with the provided small screw driver.

Illustration D-3

DIGITAL OUTPUT AND PROCESSOR BOARD

RJ-45 CONNECTOR VERSION P/N 16787

Description

This board provides all main bus **DIGITAL** audio outputs, analog and **DIGITAL** utility bus outputs, RS232, power supply, parallel channel data and GPI connectivity.
The board utilizes exclusively RJ-45 connectors in StudioHub+ pin-out format for all I/O.
The board mounts on the console inside lower right, underneath the **DIGITAL** output board.

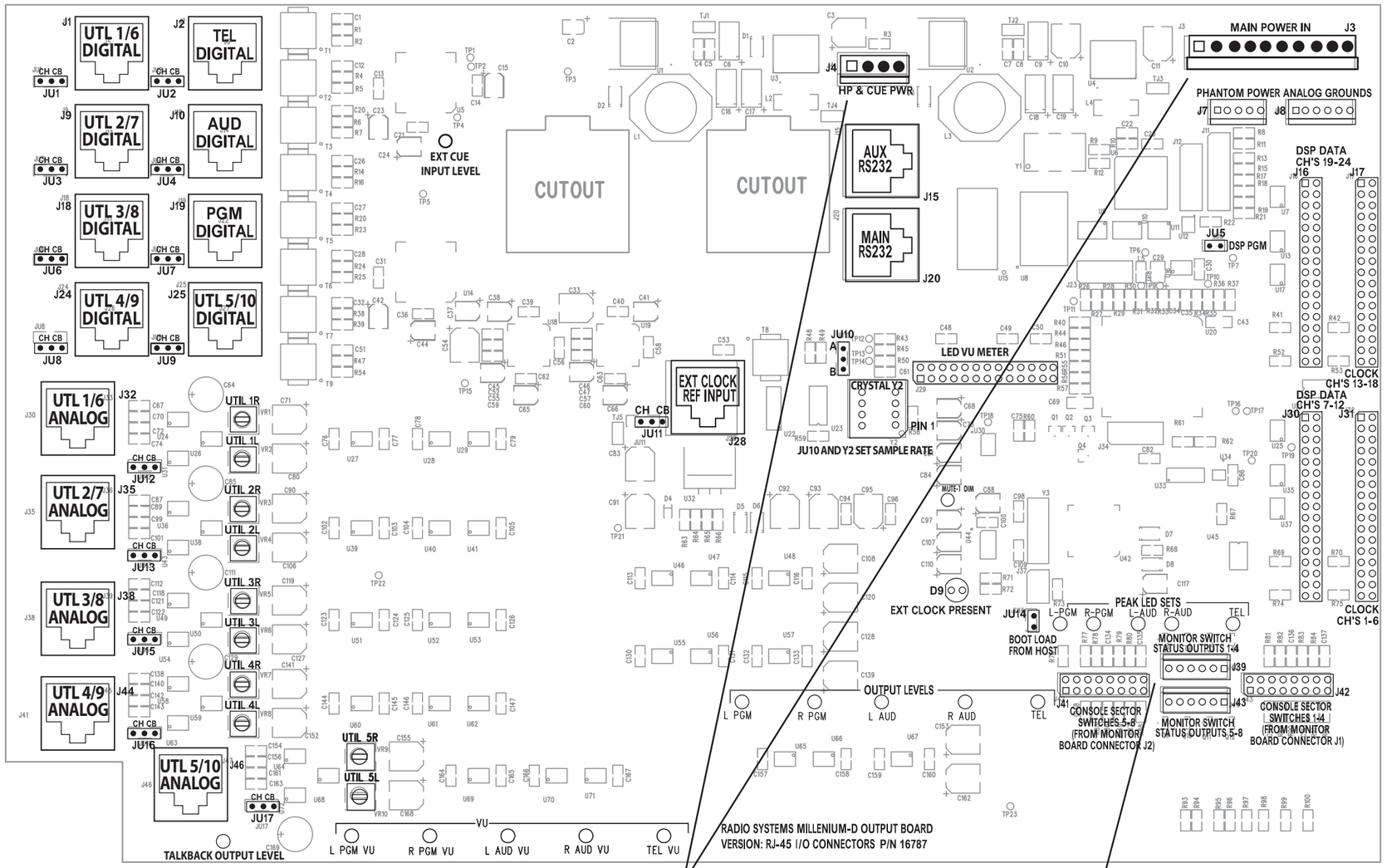

Power Supply Connector Pin-Outs and Voltages

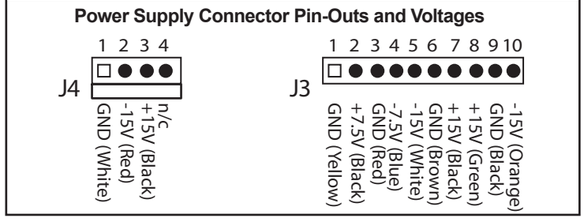

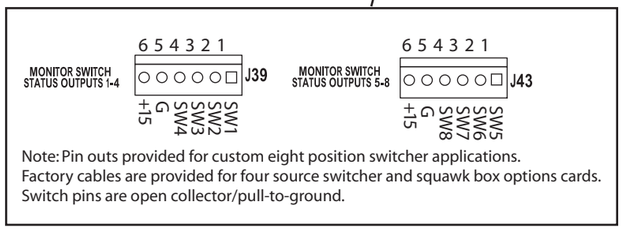

Note: Pin outs provided for custom eight position switcher applications.
Factory cables are provided for four source switcher and squawk box options cards.
Switch pins are open collector/pull-to-ground.

CARD CONNECTIONS & SETTINGS

RS-232 Main & Aux

Function	Color Pair	RJ-45 Pins	Com Port "D"
Ground	Blu/Wht	4	5
Receive	Wht/Blu	5	3
Transmit	Grn/Wht	6	2

Note: Connect PC com port to console main RS232 to establish software communication. Use com port 9 pin D to RJ-45 adapter provided (RS p/n 15329).

External Clock

Channel	Color Pair	RJ-45 Pins
Data+	Wht/Org	1
Data -	Org/Wht	2

Note: Data must be in AES/EBU (black) format. Sync defaults to external input when present.

CONSOLE SAMPLE RATE

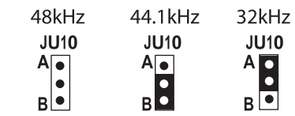

Note: A factory supplied crystal (Y2) on the sample frequency must be utilized together with JU10 settings. Sample Rate sets internal console rate as well as all DIGITAL output rates. Factory default sample rate is 44.1kHz

OUTPUT GROUNDING JUMPERS

JU1 - JU12 CB
Jumper Setting
For Circuit Ground

JU1 - JU12 CH
Jumper Setting
For Chassis Ground

(See Manual for Grounding Information)

PHANTOM POWER JUMPER

Insert jumper between pins 4 & 5 to activate phantom power on plug-in analog input cards.

(Note: JU-12 must also be inserted on the analog input cards to activate phanton power on that card)

StudioHub+ Pinout Chart

Channel	Color Pair	RJ-45 Pins
L+ / AES+	Wht/Org	1
L- / AES-	Org/Wht	2
R+	Wht/Grn	3
R-	Grn/Wht	6
nc	Wht/Blu	5
GND	Blu/Wht	4
15V-	Wht/Brn	7
15V+	Brn/Wht	8
Shield	Wht/Slt	Shield
Shield	Slt/Wht	Shield

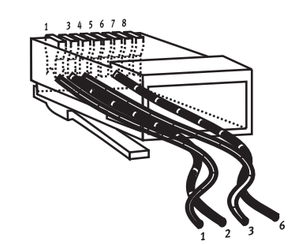

Illustration D-4

DIGITAL OUTPUT AND PROCESSOR BOARD

5-PIN CONNECTOR VERSION P/N 16786

Description

This board provides all main bus **DIGITAL** audio outputs, analog and **DIGITAL** utility bus outputs, RS232, power supply, parallel channel data and GPI connectivity.
The board utilizes 5-pin barrier strip connectors for all audio I/O and RJ-45 for data and sync.
The board mounts on the console inside lower right, underneath the **DIGITAL** output board.

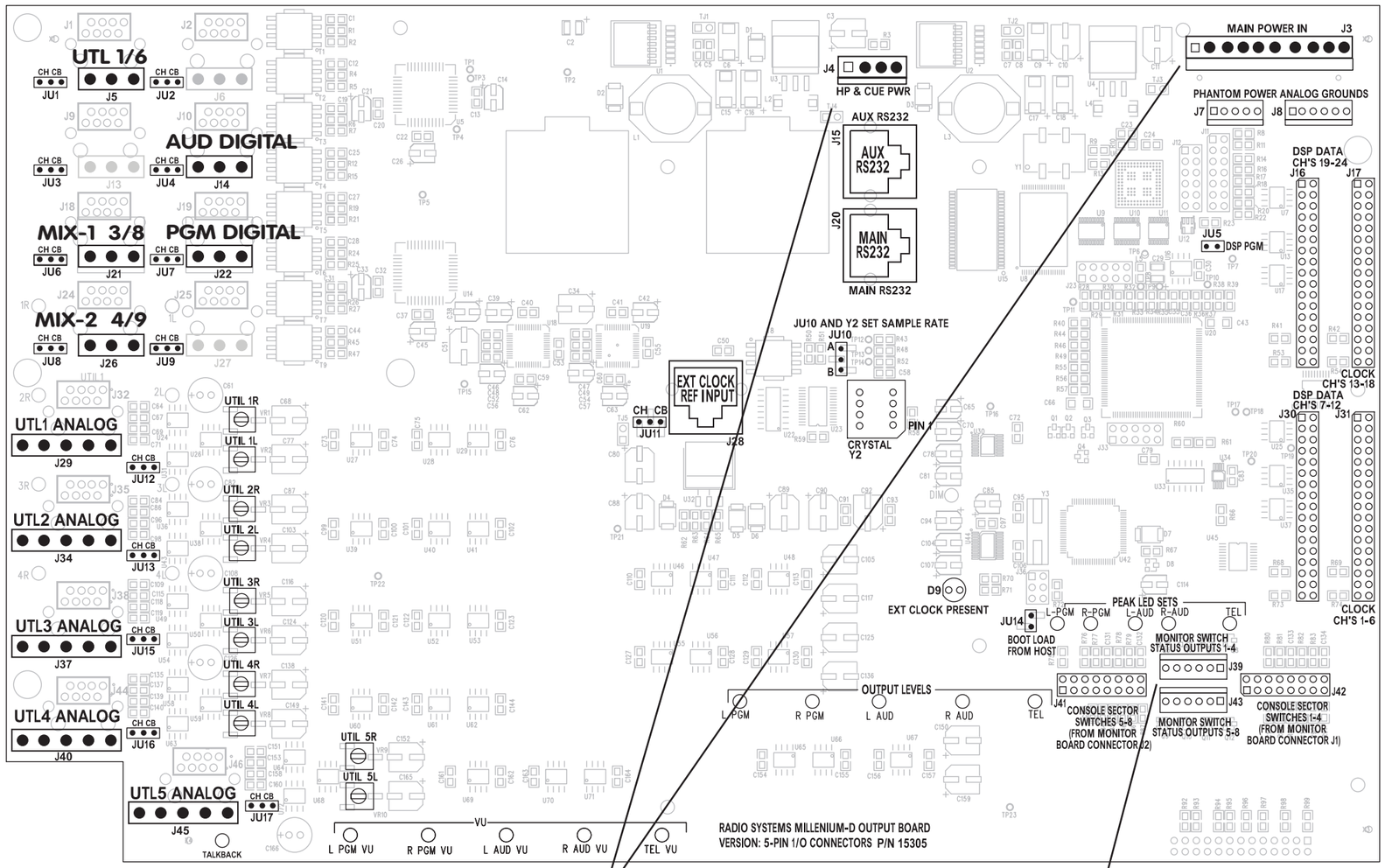

CARD CONNECTIONS & SETTINGS

AUDIO OUTPUTS

Balanced Analog

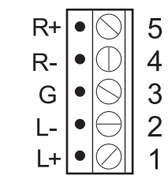

J29, J34, J37, J40
Balanced Stereo Analog Audio Connections

Unbalanced Analog

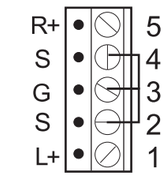

J29, J34, J37, J40
Connect hot lead to L+ and shield to neg. and ground

Balanced Digital/ Unbalanced Digital

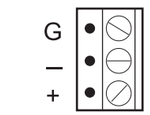

J5, J6, J13, J14, J21, J22, J26, J27
Connect balanced AES/EBU output or S-P/DIF unbalanced output to + and ground

OUTPUT GROUNDING JUMPERS

Jumper Setting For Circuit Ground

Jumper Setting For Chassis Ground

(See Manual Section 1.4.5 for Grounding Information)

CONSOLE SAMPLE RATE

48kHz	44.1kHz	32kHz
JU10 A B	JU10 A B	JU10 A B
No Jumper	B Jumper	A Jumper

Note: A factory supplied crystal (Y2) on the sample frequency must be utilized together with JU10 settings. Sample Rate sets internal console rate as well as all DIGITAL output rates. Factory default sample rate is 44.1kHz

PHANTOM POWER JUMPER

Insert jumpers between pins 4 & 5 to activate +48v phantom power on plugin analog cards

(Note: JU-12 must also be inserted on the analog input cards to activate phantom power on the card)

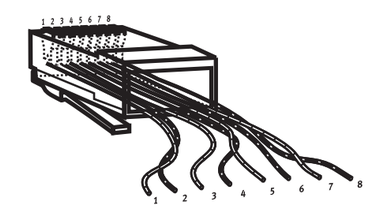

RJ-45 DATA CONNECTIVITY

RS-232 Main & Aux

Function	Color Pair	RJ-45 Pins	Com Port "D"
Ground	Blu/Wht	4	5
Receive	Wht/Blu	5	3
Transmit	Grn/Wht	6	2

Note: Connect PC com port to console main RS232 to establish software communication. Use com port 9 pin D to RJ-45 adapter provided (RS p/n 15329).

External Clock

Channel	Color Pair	RJ-45 Pins
Data+	Wht/Org	1
Data -	Org/Wht	2

Note: Data must be in AES/EBU (black) format. Sync defaults to external input when present.

Power Supply Connector Pin-Outs and Voltages

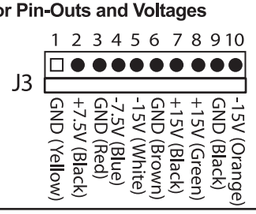

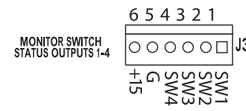

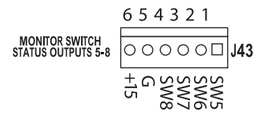

Note: Pin outs provided for custom eight position switcher applications.
Factory cables are provided for four source switcher and squawk box options cards.
Switch pins are open collector/pull-to-ground.

Illustration D-5
Auxiliary Control Relay Wiring

Connect the auxiliary relay (optional) (RS Part #7699) to the console muting connector J7 on the analog output board for mute-1 or mute-2 control of air lights and other outboard equipment

A solid-state model of this relay (RS Part #9375) is also available. Note that this part is only supplied single pole (SPST) configuration.

IMPORTANT NOTE: Take extreme care in wiring this relay to console connectors J7 to ensure that no hazardous (110V) voltage is applied to pins on this connector.

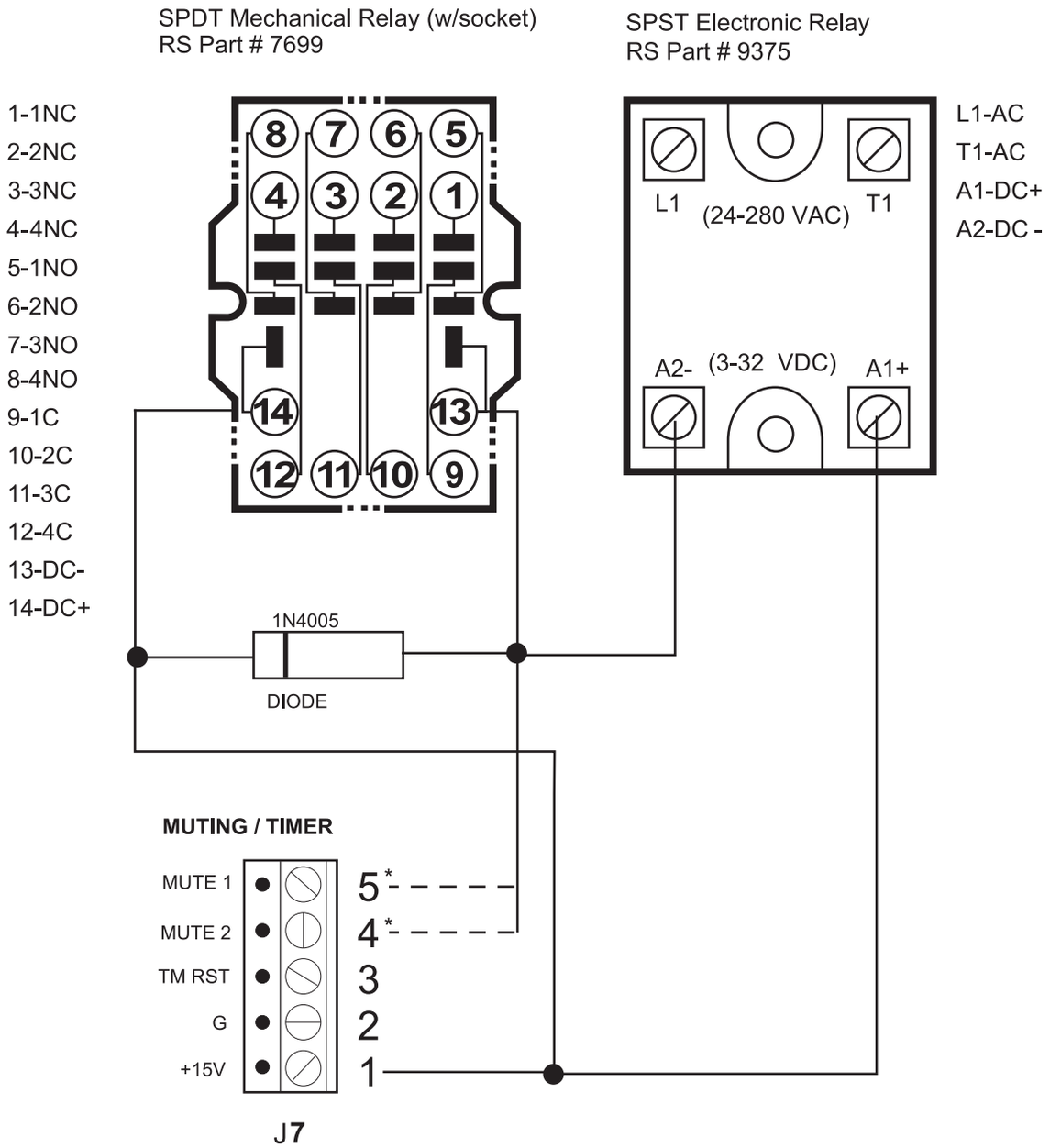

*Note: Connect to pin 5 for Mute 1 Control
Connect to pin 4 for Mute 2 Control

Illustration D-6
Talkback Wiring

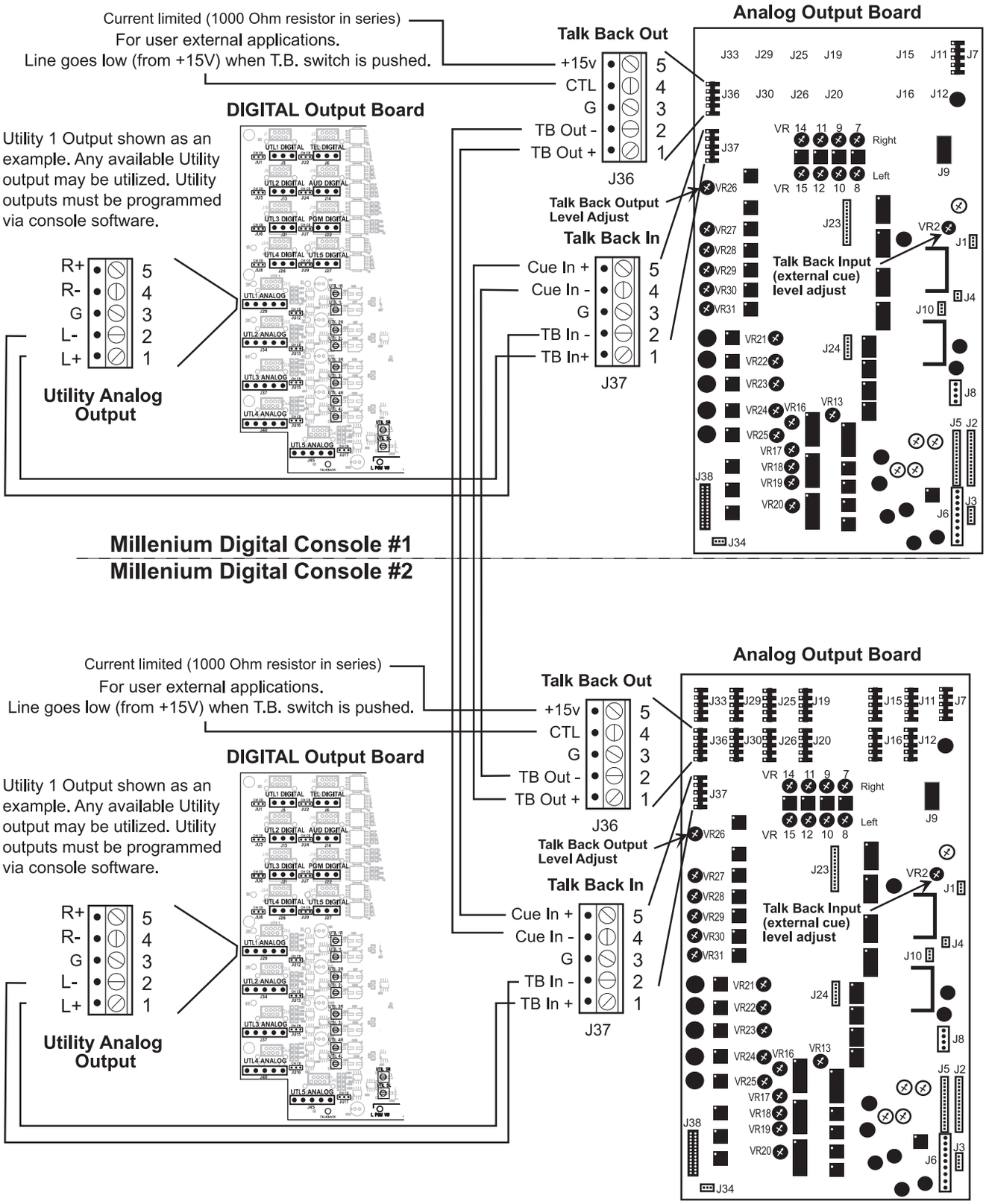

Illustration E-1
Enhanced Remote Interface Card

Description

This option card connects to any input channels 15-pin remote connector to provide relay and opto isolated channel on/off and start/stop control.

Jumpers are also provided to program various enhanced logic states.

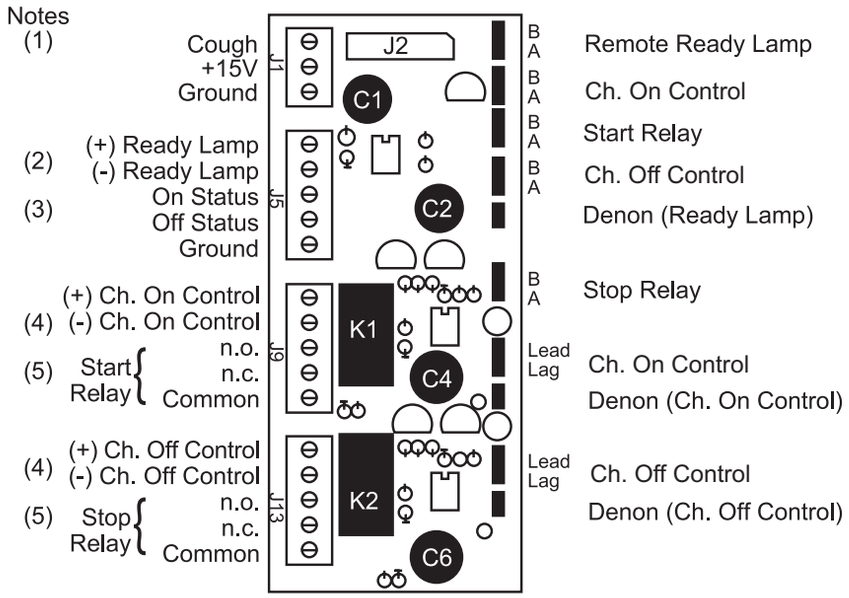

Remote Wiring Notes

(1) Connect and hold "cough" and +15v pins to hold the channel off.

(2) Apply from +5v to 24v DC to these leads to illuminate the channel off lamp.

(3) These leads go low to indicate channel on or off state.

(4) Apply from 5v to 24v DC these leads to turn the channel on or off.

(5) Relays pulse or hold close when channel turns on or off.

Programming Notes

A/B jumpers - short upper 2 pins for input B control, or short lower 2 pins for input A control of associated function.

Lead/lag jumpers - short upper 2 pins for leading control, or short lower 2 pins for lagging control of remote channel On or Off control.

Denon CD Players - insert these 3 jumpers to adjust card timing pulses to utilize in conjunction with Denon model 950FA CD cart machines.

Installation Notes

When ordered with the console, this optional board will normally be factory installed and operational.
For field installation, use the four plastic standoffs provided to mount the board on the inside rear console wall near the associated input and output. Use the cable provided to wire the Remote Board(s) to the desired console channel remote control D connector via on-board connector J-2.

Illustration E-2
Four Source Router Card

This optional card is a 4x2 balanced stereo router which can be used bi-directionally. That is, the board can be used to route 4 balanced stereo sources to one stereo input, or direct one stereo output to any one of four stereo inputs.

Because all switching is via relay contacts (passive), multiple router boards can be "daisy chained" by connecting the router outputs in parallel to create an 8x2 (or larger) matrix.

The four source router board is designed to be controlled by the Radio Systems selector logic board, which interfaces one or two 4 source router boards to the Millenium console front panel selector switches.

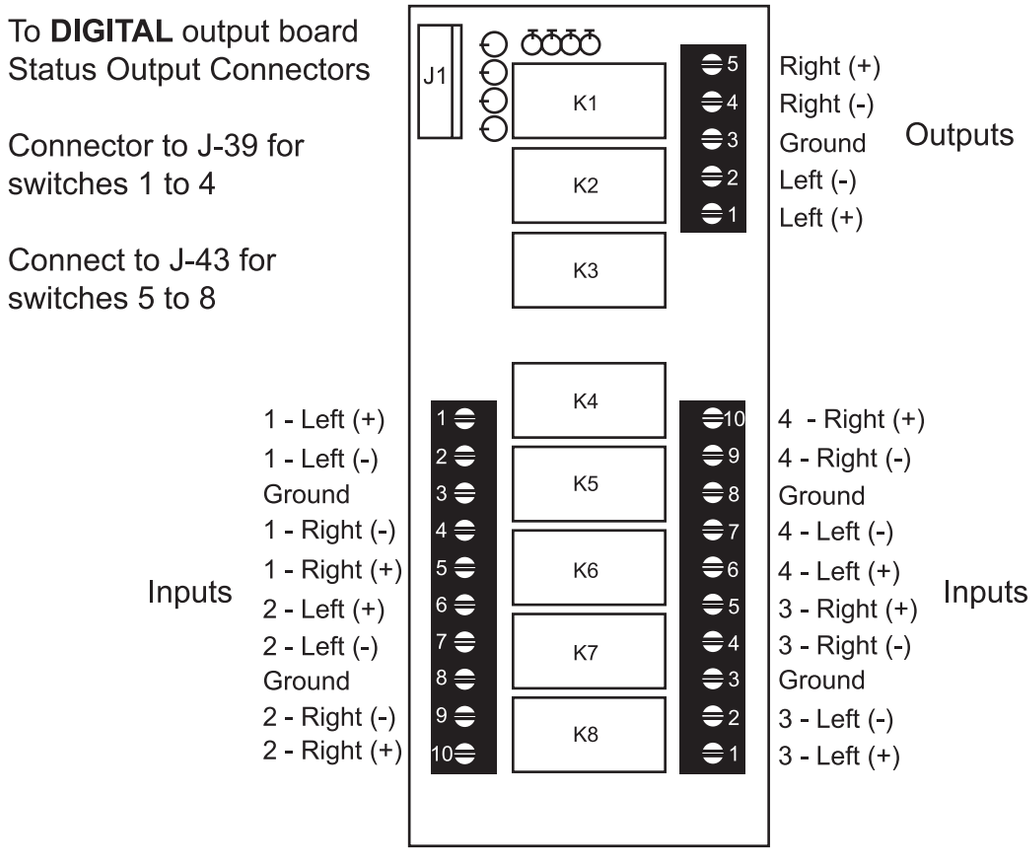

Installation Notes

When ordered with the console, this optional board will normally be factory installed and operational. For field installation, use the four plastic standoffs provided to mount the board on the inside rear console wall near the associated input or output.

Two cards may be installed as above independently and used as two 4x2 routers, or used in tandem to create a 8x2 router by connecting the outputs in parallel.

Illustration E-3
DA Mixer Card

Description

This optional, compact circuit card installs internally in Millenium consoles and may be connected to any console audio output(s) to distribute signal to multiple sources. The card features bridging inputs, low impedance outputs, and independent level adjusts for each output.

Installation

Use the plastic pins supplied to mount the circuit card on any free slot on the console inside rear wall. Supply DC power via the three wire cable from any auxiliary DC output connector on any lower console circuit board. The second DC connecter can be used to supply DC to power additional console option boards.

Applications

Use the DA/MIXER to distribute program or audition audio, create a mono program blend or a “mix-minus” feed of multiple signals. On analog Millenium consoles, the DA/MIXER may also be wired to loop through channel patch points (while leaving the loop-through jumpers in place) to “pick-off” and distribute individual channel audio. The DA/MIXER, used in this application, will balance and buffer the audio, maintaining the integrity of channel audio as it exits the console.

Each of the 8 outputs can be jumper programmed to deliver one or any mix of the 4 inputs. Thereby, multiple stereo outputs can be created by jumpering one input to multiple outputs. A mono mix of stereo inputs can be created by jumpering a signal output to multiple inputs. A “mix-minus” output can be created by jumpering one input to multiple outputs with additional inputs to the same outputs.

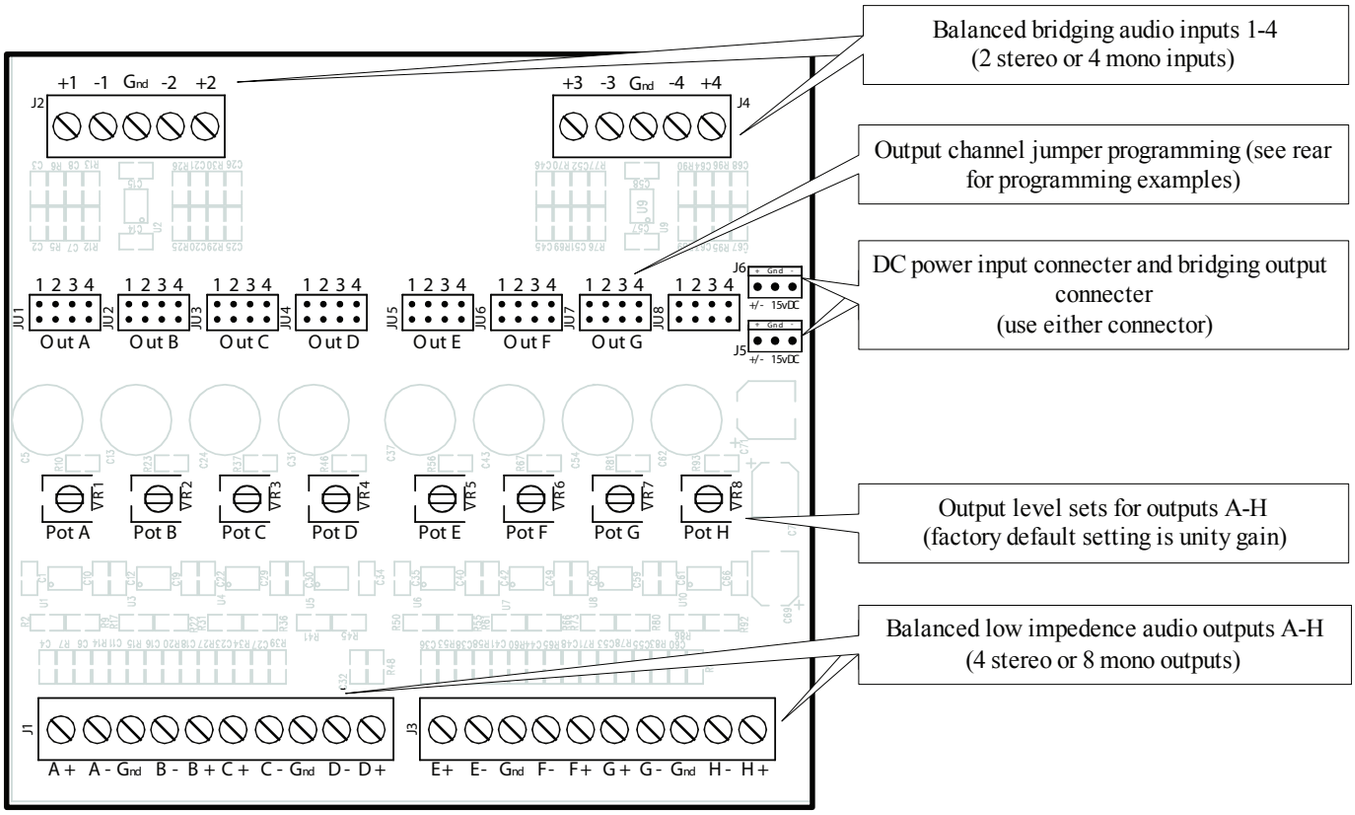

When ordered with the console, this optional board will normally be factory installed and operational. For field installation, use the four plastic standoffs provided to mount the board on the inside rear console wall near the associated input or output. Connect the 3-pin power connector to any available 3-pin power port (+/-15v DC & Ground), on any lower console circuit board.

Illustration E-4
DA Mixer Card Programming Examples

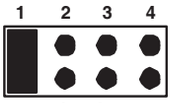

Output Programming Jumpers JU1-JU8
(black over pin 1 indicates user installed jumper)

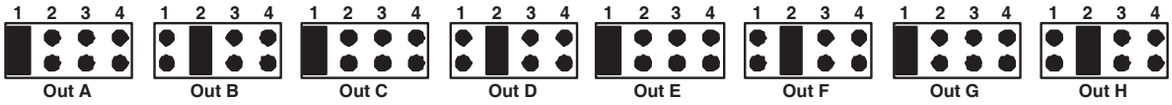

Stereo DA - 1x4
Single stereo input (1/2) to 4 stereo outputs (A/B, C/D, E/F, G/H)

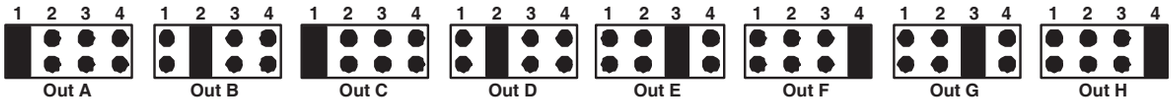

Dual Stereo DA - 2x2
Dual stereo input (1/2)+(3/4) each to 2 stereo outputs (A/B, C/D)+(E/F, G/H)

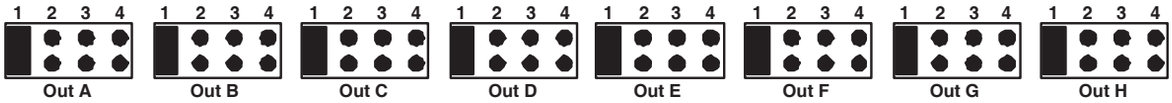

Mono 8 Output DA - 1x8
One mono input (1) to 8 mono outputs (A.B.C.D.E.F.G.H)

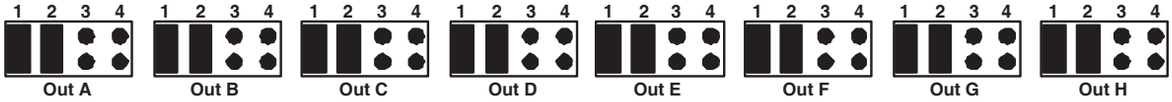

Stereo Summing 8 Output DA - 2x8
One stereo input summed to 8 mono outputs

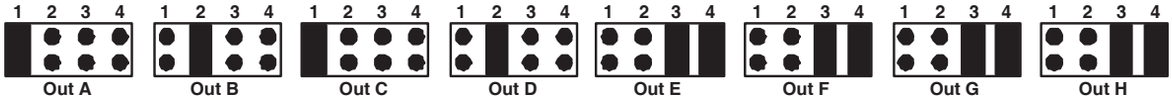

Stereo DA - 1x2 / Mono DA - 1x4
One stereo input (1/2) to 2 stereo outputs (A/B,C/D) and one stereo input (3/4) mixed to 4 mono outputs (E,F,G,H)

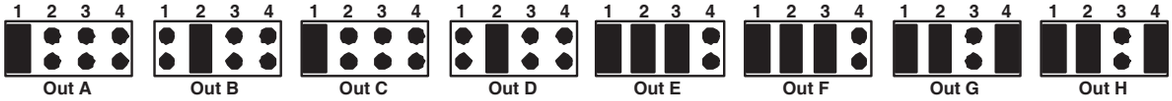

Stereo Program with 2 Summed Mix-Minus outputs - 1x2 with 3 Mix-Minus
One stereo input (1/2) to 2 DA outputs (A/B,C/D) plus two mix-1 outs (E,F) and two mix-2 outs (G,H)

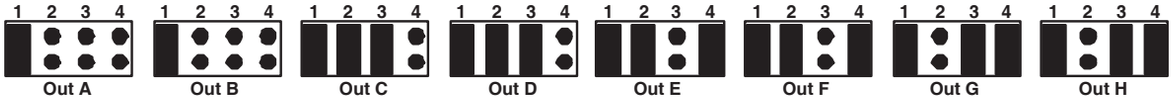

Mono Program with 3 Mix-Minus Outputs - 1 with 4 Mix-Minus
One mono input (1) to 2 DA outputs (A,B) plus three sets of mix-1, mix-2, and mix-3 outputs (C,D/E,F/G,H)

Illustration E-5
Intercom Wiring Card

To Interconnect the Intercom Card to Radio Systems' Millenium Analog Consoles

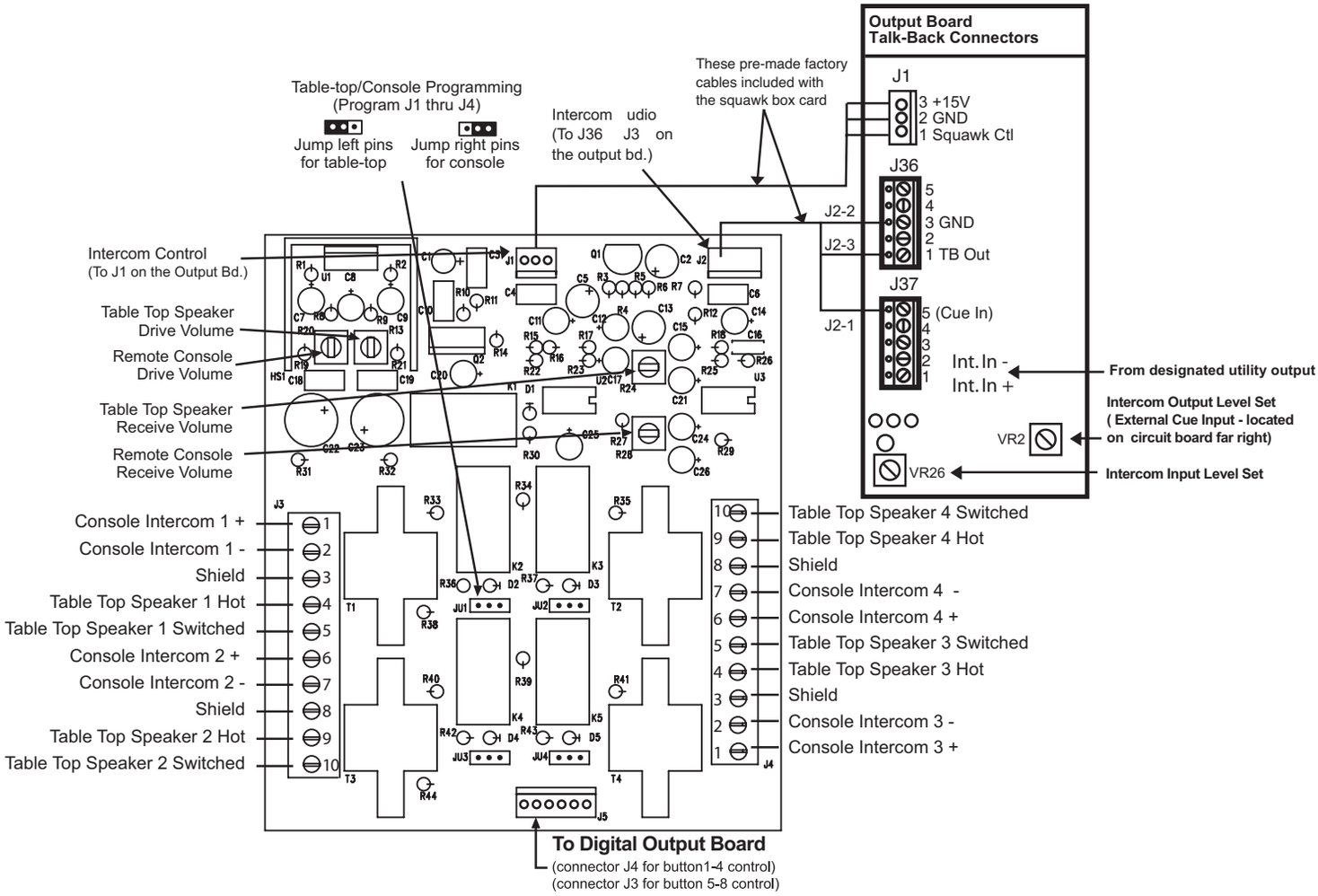

Wiring

1. Connect utility output (typically with operators mic prefader/pre on-off assigned) (or other line level source) to output board talk-back input (J37 pins 1 & 2).

2. Connect provided patch cables from intercom card to output board (control cable from intercom card J1 to console connector J1 and the audio cable from intercom card J2 to console conenctors J36 & J37).

3. Connect up to four table-top speakers to terminals labeled "table-top speaker hot" and "table-top speaker switched" (1-4). Use shielded cable. Consult interconnection diagram on next page for hook-up. Select table-top speaker on console selector buttons for hands-free mode. Table-top speakers can "call" the console via call button.

4. Connect up to four console intercoms to terminals labeled "console intercom +" and "console intercom -". Consoles must select each other to establish a push-to-talk pathway.

5. Maximum of four stations "any combination of table-top and console" may be connected.

6. Set VR2 for Intercom output level and set VR26 for Intercom input level

Installation

When ordered with the console, this optional board normally will be factory-installed.

For field installation, use the four plastic stand-offs provided to mount the board on the inside rear console wall near the associated input and output and wire it to the output board with the two (supplied) harness cables.

Illustration E-6
Intercom Card Table-Top Speaker & Console Interconnection

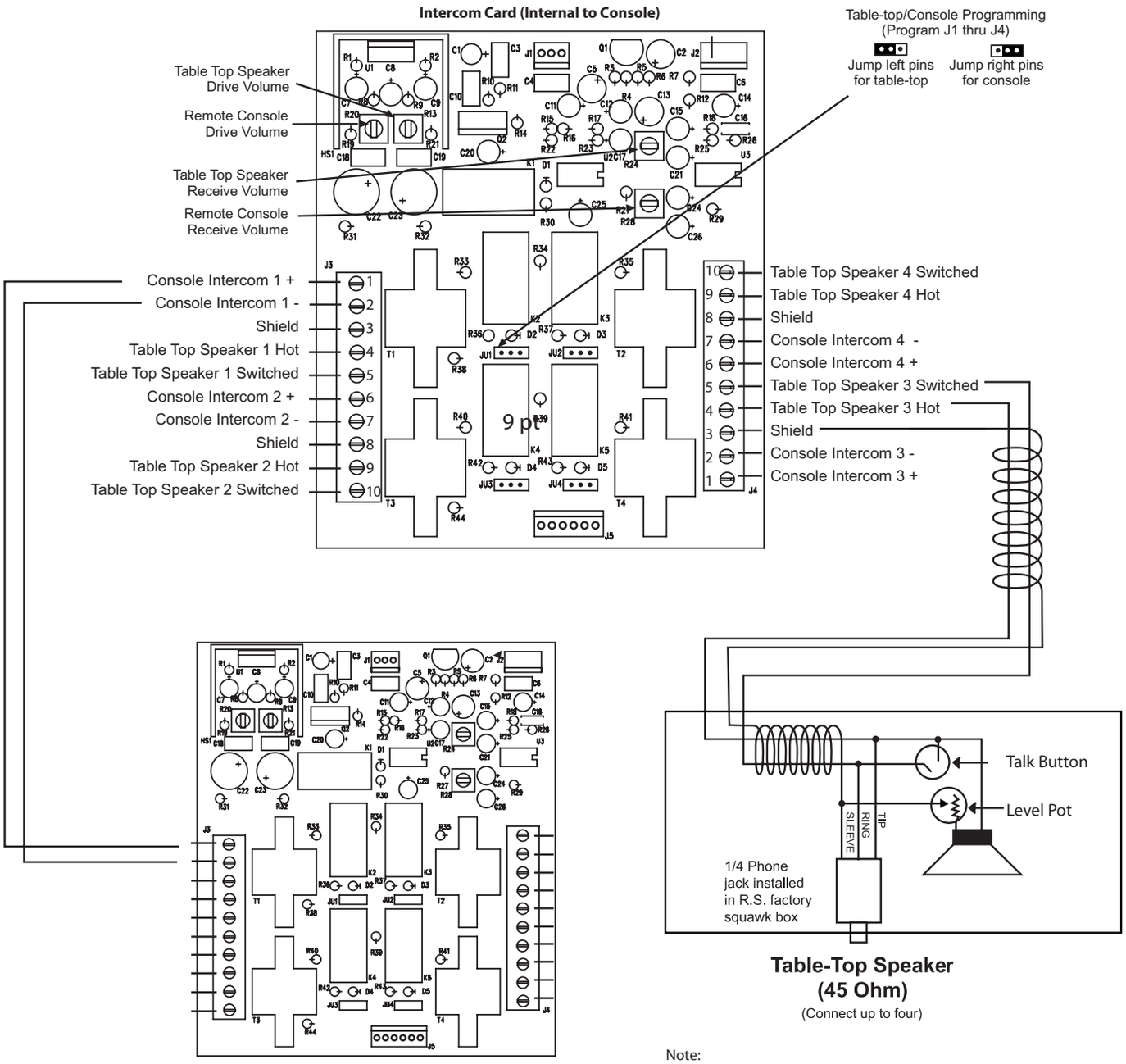

Note:
Use shielded cable when making connections.

Be certain to perform J-1 thru J-4 programming to set table-top or console operation.

Connect up to four table-top or console intercoms in any combination. (Only one of each can be connect to any channel)

5.1 Description – Overview

The Intercom is an optional accessory for the Millenium digital broadcast consoles. The card provides 2-way amplification for connection of the console to any combination of four speakers or Radio Systems' consoles. One or two cards may be installed in a console to service four or eight stations.

5.2 Operation

With a table top speaker (Radio Systems Part #7696)

To page and speak from the speaker to the console, push and hold the button on the speaker.

To respond to or call the speaker from the console, select the speaker location on the console 4/8 position selector and push and hold the talkback button.

Release the talkback button to allow the speaker location to respond hands free.

Deselect the speaker location on the 4/8 position selector to hush the listen path.

Between two consoles

Select the console you wish to communicate with on the 4/8 position selector.

Push and hold the talkback button to page and speak to the selected console.

To respond, the selected console must select the paging console on the 4/8 position selector, (if it is also equipped with a intercom card) and push and hold the talkback button.

Push-to-talk conversation may continue between the consoles. Console operators should deselect the console on the 4/8 position selector when the conversation is complete.

5.3 Installation and Wiring

Use the plastic stand offs provided to mount the intercom card and the logic selector card (required and utilized only in Millenium consoles) next to each other on the inside back wall of the console behind the output board.

5.3.1 Control Wiring

Install the control cable(s) provided between digital output board connector J39 for switches

1-4 and J43 for switches 5-8 and monitor board D connector J1 and intercom control connector.

The eight position switcher must be programmed for interlocked operation. See the "eight position switcher" page in the software section for more information.

5.3.2 Intercom card audio wiring

Connect the 3-conductor control cable provided between intercom card connector J1 and analog output card connector J1. Connect the 4-conductor audio cable between intercom card connector J2 and output board Talk-Back audio connectors J36 & J37. (For RS Series consoles only – connect J4 to the 4-position front panel mechanical switch.)

5.3.2.1 Console internal wiring

Designate and wire a console Utility bus output to the intercom talk-back input (connector J37 pins 1, 2, 3). Consult the software section page "Utility Bus" for instructions to configure this bus for operator microphone, pre on/off and prefader feed.

5.3.2.2 Table-top speaker wiring

Utilize up to 300' of 2-conductor shielded cable. At the intercom card, connect the shield to GRND, the tip from the phone plug (switch output) to call, and the ring to the other side of the call switch.

5.3.2.3 Console interconnection

Interconnect the SPKR, GRND and AUX in pins from the appropriate intercom card outputs on the two consoles, or to talk-back Audio Connectors J36 & J37 on consoles with no intercom board.

5.4 Calibration

Adjust the output level control on the intercom card for more level at the remote speakers or console.

Adjust the external cue level control on the analog output board to set the intercom input level and to balance it with the cue level of the internal console cue inputs.

Using Active Balanced Circuitry

Balanced lines have been used for many years and are in continuing use today because of their immunity to stray pickup. Induced signals appear on both sides of the balanced line. The receiving end of the balanced line responds only to the difference voltage between the lines which is the desired signal. Induced signals are common to both and are balanced out.

Transformers have been the mainstay of balanced circuitry for decades. Unfortunately, transformers cause distortion and ringing, and are susceptible to magnetic flux pickup. Further, good quality audio transformers are very expensive.

The use of op-amp balanced circuitry has the advantage of transformers without the disadvantages. The only caveat is that careful wiring practices are more important with active balanced than with transformers.

Active balanced outputs and inputs use three wires: +, -, and ground. The + and - terminals are both driven and neither should ever be connected to ground. For best performance, a three-conductor shielded wire should be used. The third wire completes the ground circuit. The shield should be connected to the ground at one end of the wire only.

If a two-wire shielded cable is used, it is important that a ground connection be made between the sending and receiving units. A ground circuit through equipment chassis or through three-prong AC cord ground is also acceptable.

Single-ended audio interconnections lack the interference immunity of balanced hook-ups. For the reason, keep unbalanced connections short, direct, and well separated from AC power wires. To drive a single-ended load from an active balanced source, use coaxial wire: + to center conductor and ground to shield, leaving the - output unconnected. To feed an active balanced input from a single-ended source, use coaxial wire, connecting the hot center conductor to +. Connect the shield to ground and put a jumper from ground to -.

When driving an active balanced input from a transformer balanced floating source, use two conductor shielded wire. Ground the shield at the source end. Establish good ground between the chassis either directly or though AC plug ground prongs. At the load, connect the + lead to the + input and the - lead to the - input. Put two 300 ohm resistors in series between the + input and the - input and connect their mid-point to the load ground. This correctly terminates the source output transformer for optimum frequency and transient response (freedom from ringing) and provides a low impedance return path for leakage and induced hum. If more than one active balanced load is to be placed across a floating balanced transformer source, install this resistive termination once only. From that location to the active balanced loads, run three-conductor shielded wire, shield continued from the sources chassis, + from +, - from -, and ground from the mid-point of the terminating resistors.

To drive a balanced floating transformer load from an active balanced source, use shielded wire. Connect the shield to source ground and leave the shield open at the load end. Connect + to + and - to -, and establish a good source ground to load chassis connection, either through a third wire in the interconnect cable or through chassis contact or AC cord third wire ground.

Interconnections between pieces of stereo equipment require doubling the connections described above without duplicating the ground connection. Between pieces of active balanced stereo equipment, then, 5 shielded conductors should be run.

When testing active balanced equipment with single ended test equipment, do not connect the - to test equipment ground. Most modern test equipment provides balanced inputs. In many dual-trace oscilloscopes, balanced signals may be displayed by running the two inputs in the “add” mode with one input switched to invert. To perform a test with single-ended equipment, + and - outputs must be tested independently and their results added. Testing only a single output results in a 6 db loss in output level.

The active balanced equipment interconnection format makes possible state of the art fidelity. Careful attention to detail and conservative practice will be rewarded with outstanding flat frequency response, low distortion, and wide dynamic range.

REVISION RECORD			
LTR	ECO NO:	APPROVED:	DATE:
C	ADD D133		8-4-03
D	ADD JU206		6-9-05
E	ADD JU212, JU213, F914		5-2-06

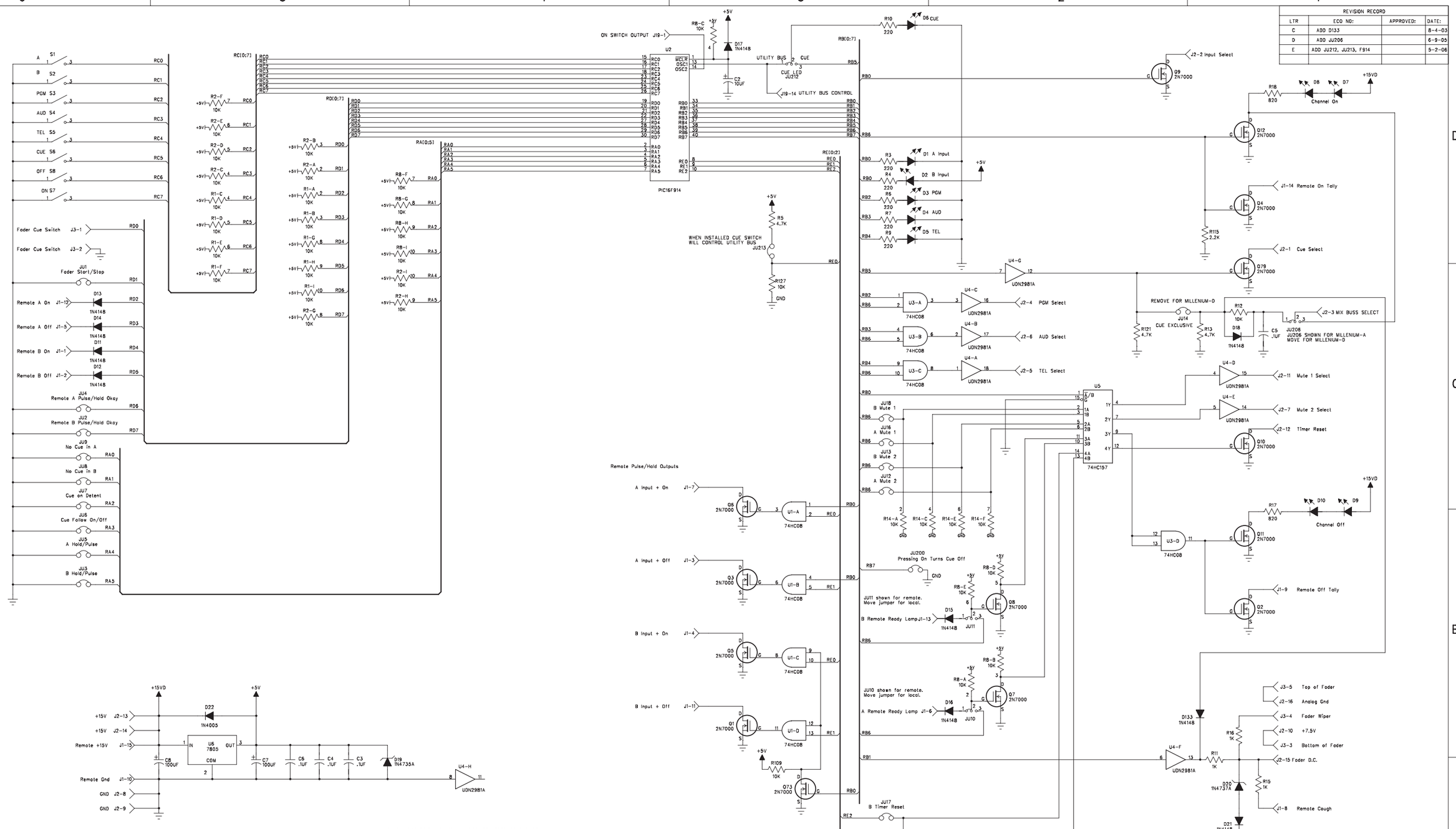

WITH THE EXCEPTION OF J19 ALL CIRCUITRY REPEATS 6 TIMES

DRAWN: SIRKIS	DATED: 7-29-2008	COMPANY: RADIO SYSTEMS	
CHECKED:	DATED:	TITLE: MILLENIUM SMT CONTROL BOARD	
QUALITY CONTROL:	DATED:	CODE:	SIZE: D
RELEASED:	DATED:	DRAWING NO: BLANK BOARD 18515 ASSEMBLY 18516 (Analog) ASSEMBLY 18522 (Digital)	REV:
		SCALE:	SHEET:1 OF 1

F-1

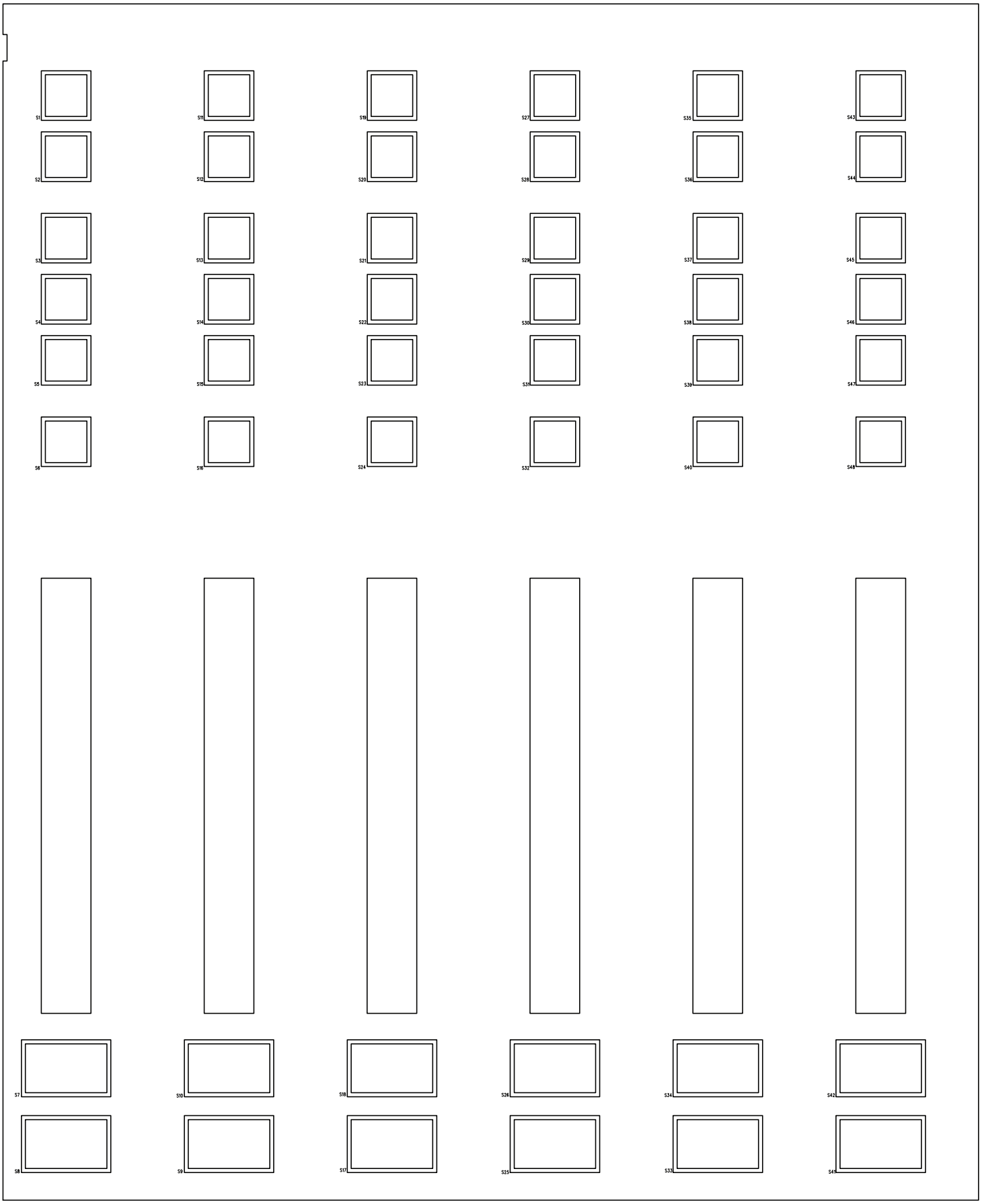

radio SYSTEMS Logan Township, NJ	TITLE: SIX CHANNEL CONTROL BOARD	
MILLENIUM RS-D CONSOLE	TYPE: PARTS LAYOUT	
	DATE: 9-1-2007	PART NO: 18522 / REV: E

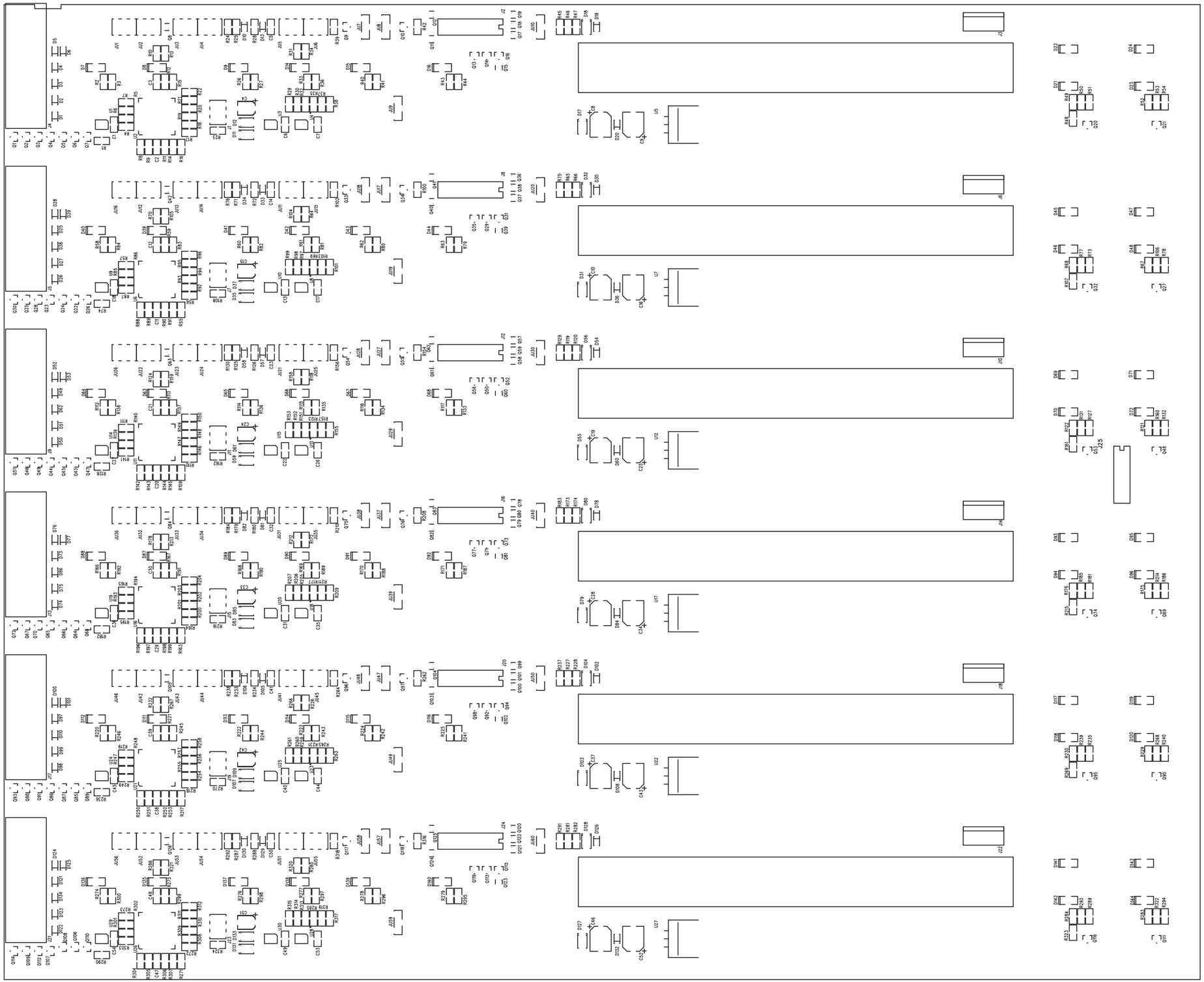

F-3

radio SYSTEMS Logan Township, NJ	TITLE: INPUT CONTROL BOARD	
	TYPE: PARTS LAYOUT	
MILLENIUM RS-D CONSOLE	DATE: 9-2011	PART NO: 18522	REV: E

SIX CHANNEL CONTROL BOARD PARTS LIST

RS Part #	Manufacturer Part #	Reference Description	Value	Manufacturer	Descrip.	Qty
18517	CD74HC08PW	U1,3,9,10,14,15, 19,20,24,25,29,30	74HC08	TI	QUAD 2-INPUT POS-AND GATE	12
18518	SN74HC157PW	U4,8,13,18,23,28	74HC157	TI	QUAD 2-TO-1-LINE DATA SELECTOR/MULTIPLEXER	6
16005	ECJ-2YB1H104 K	C1-3 C5-7,C11-14,17, 18,C20-23,C26-27,29, C30-32,35,36,38,39, 40,41,44,45,47,48,49, 50,53,54	.1UF	PANASONIC	SURFACE MOUNT CAPACITOR 0.048 X 0.079 INCHES	36
15505	ICF-314-T-O	J25		SAMTEC	14 PIN SMT DIP SOCKET	1
16655	ICF-316-T-O	J2,8,12,16,20,24		SAMTEC	16 PIN SMT DIP SOCKET	6
16006	EEV-FK1V100U R	C4,15,24,33,42,51	10UF	PANASONIC	CAP SURFACE MOUNT POLAR VS-B	6
16643	EEE-FK1E101X P	C8-9 ,10,16,19,25,28, 34,37,43,46,52	100UF	PANASONIC	CAP SURFACE MOUNT POLAR VS-D	12
10928	DNP-15STCC-G-F1	J4,5,9,13,17,21		KELTRON	15 PIN D CONNECTOR	6
16512	MMSD4148T1G	D1-6 D10 D13 D19,D25-30, D33,34,38,49, D50-54,57,58,62, D73-78,81,82,86,97, D98-102,105, 106,110,D121-126,129,130,134		ON SEMICONDUCTOR	SWITCHING DIODE	54
16717	MMSZ5234BT1	D20,36,60,84,108,132	6.2V 1W	ON SEMICONDUCTOR	ZENER DIODE 6.2V 1W	6
16719	MRA4005-T1	D11,17,31,35,55,59,79, 83,103,107,127,131	MRA4005	ON SEMICONDUCTOR	DIODE	12
18519	SMAZ7V5	D18,32,56,80,104,128	SMAZ7V5	MCC	ZENER DIODE 1W	66
16626	B340LA-13	D12,37,61,85,109,133	B340LA-13	Diodes Inc	Schotty Rectifier B340LA	6
7052	AMP-640456-5	J3,6,10,14,18,22		Amp	5 PIN MTD HEADER	6
18571	TSM-106-01-T-DV-P-TR	JU1/2,3/4,5/6,16/12, 13/14,11/15,26/22, 23/24,21/25, 36/32,33/34,31/35,46/42, 43/44,41/45,56/52,53/54,51/55		SAMTEC	HEADER 6 PIN (2 X 3)	18
16904	TSM-103-01-T-DV-P-TR	JU1,7,11,15,19,23		SAMTEC	HEADER 6 PIN (2 ROWS x 3) SMD	6
18195	23-21B/T1D-APQHY/A	D7-9 D14-16 D23-24,33,39, D40-43,D47-48 D63-67,71,72, D87-91,95,96,D111-115,119,120 D135-139,143,144		EVERLIGHT	LED SMT REVERSE MOUNT WHITE	42
18524	23-21B/Y2C-AN1P2/2A	D16,21,22,D44-46,D68-70,D92-94, D116-118,D140-142		EVERLIGHT	LED SMT REVERSE MOUNT AMBER	18
16011	LM2940S-5.0	U5,7,12,17,22,27	+5V	NATIONAL SEMI	POS VOLT REG	6
18520	MUN5314DW1	Q8,11,12,15,Q17-19,Q36-42, Q57-63 Q78-84,Q99-105,Q120-126	MUN5314	ON SEMI	COMPLEMENTARY NPN PNP PAIR	42
18521	PIC16F1914 I/PT	U2,6,11,16,21,26	PIC16F1914	MICROCHIP	FLASH MICROCONTROLLER 32MHZ	6

SIX CHANNEL CONTROL BOARD PARTS LIST

RS Part #	Manufacturer Part #	Reference Description	Value	Manufacturer	Descrip.	Qty
16575	RC0805FR-071OKL	R1,R3-9,14,15,17,23,27-32,34-39, 41,42,44,51,54,74,79-104,108,557, 56,64,69,72,73,78,128,133-158,162, 110,111,118,123,126,127,132,172, 177,180,182,187-212,164-165,181, 186,236,241-266,218,219,226,231, 234-235, 240,270,290,295-320,273, 280,285,288,324,289,294	10K	YAGEO	SURFACE MOUNT RESISTOR 0.048	210
16019	RC0805FR-071 KL	R45-47,65,66,75,119,120,129,173, 174,183,227,228,237,281,282,291	10K	YAGEO	SURFACE MOUNT RESISTOR 0.048 X 0.079 INCHES	18
17022	ERJ-6ENF2211	R48,107,161,215,269,323	2.21K	PANASONIC	SURFACE MOUNT RESISTOR 0.048 X 0.079 INCHES	6
16023	RC0805FR-073 57RL	R2,58,112,166,220,274,12,59,113, 167,221, 275,26,60,114,168,222, 276,33,61,115,169,223,277,40,62, 116,170,224,278,43,63	357	YAGEO	SURFACE MOUNT RESISTOR 0.048 X 0.079 INCHES	36
14667	RC0805FR-074 K7L	R13,105,159,213,267,321,24,25, 71,76,125,130,179,184,233, 238,287,292	4.7K	YAGEO	SURFACE MOUNT RESISTOR 0.048 X 0.079 INCHES	18
16041	RC0805FR-074 22RL	R49,50,68,77,122,131,176,185, 230,239,284,293,52,53,67,106, 121,160,175,214,229,268,283,322	422	YAGEO	SURFACE MOUNT RESISTOR 0.048 X 0.079 INCHES	24
16916	RC0805FR-074 7K5L	R10,70,124,178,232,286	47.5K	YAGEO	SURFACE MOUNT RESISTOR 0.048 X 0.079 INCHES	6
14468	ERJ-6GEYR00	R16,55,109,163,217,271	DNP	PANASONIC	SURFACE MOUNT RESISTOR 0.048 X 0.079 INCHES	6
16025	ZXMN6A07FTA	Q1-7,14,16,9,10,13,20-35,43-56, 64-77,85-98,106-119	8MM	Zetex	N TYPE MOSFET	84

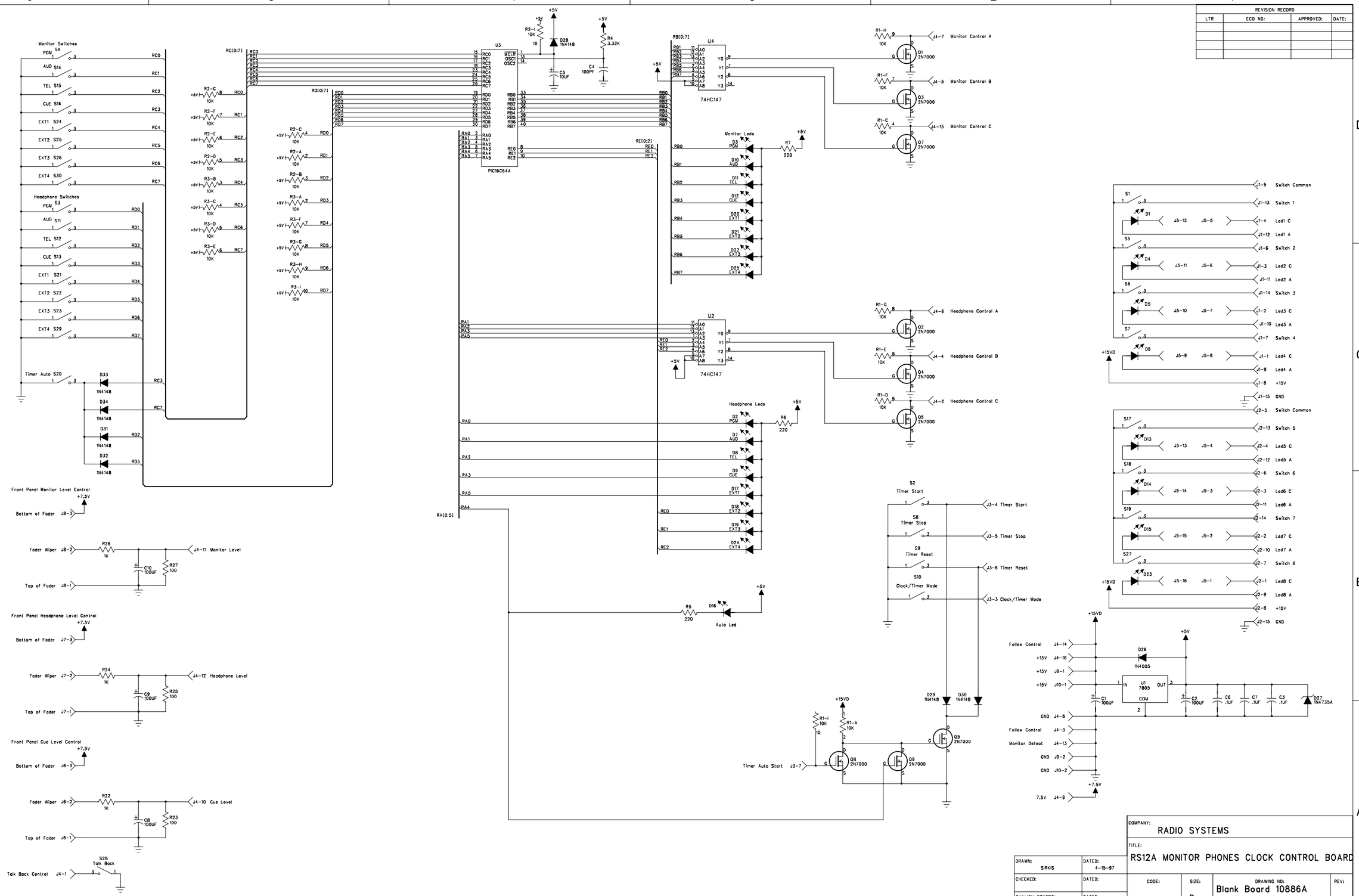

REVISION RECORD			
LTR	ECO NO:	APPROVED:	DATE:

COMPANY: RADIO SYSTEMS

TITLE: RS12A MONITOR PHONES CLOCK CONTROL BOARD

DRAWN: SIRKIS	DATED: 4-15-97		
CHECKED:	DATED:		
QUALITY CONTROL:	DATED:		
RELEASED:	DATED:		

CODE:	SIZE:	DRAWING NO:	REV:
	D	Blank Board 10886A Assembly 10887A	

SCALE: SHEET: 1 OF 1

F-6

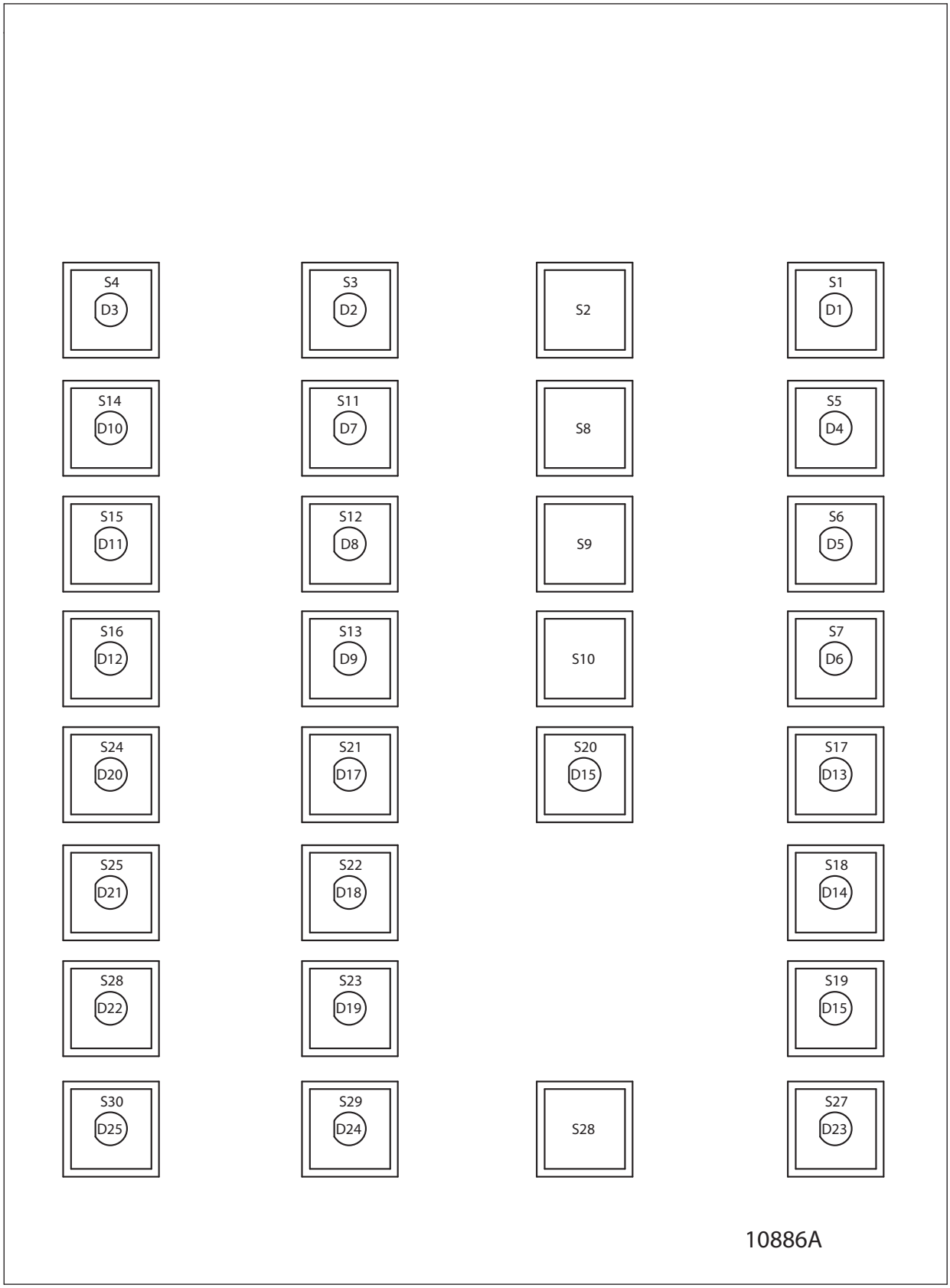

radio SYSTEMS Logan Township, NJ	TITLE: MONITOR BOARD		
MILLENIUM RS-D CONSOLE	TYPE: PARTS LAYOUT		
	DATE: 9-1-2007	PART NO: 15277	REV: A

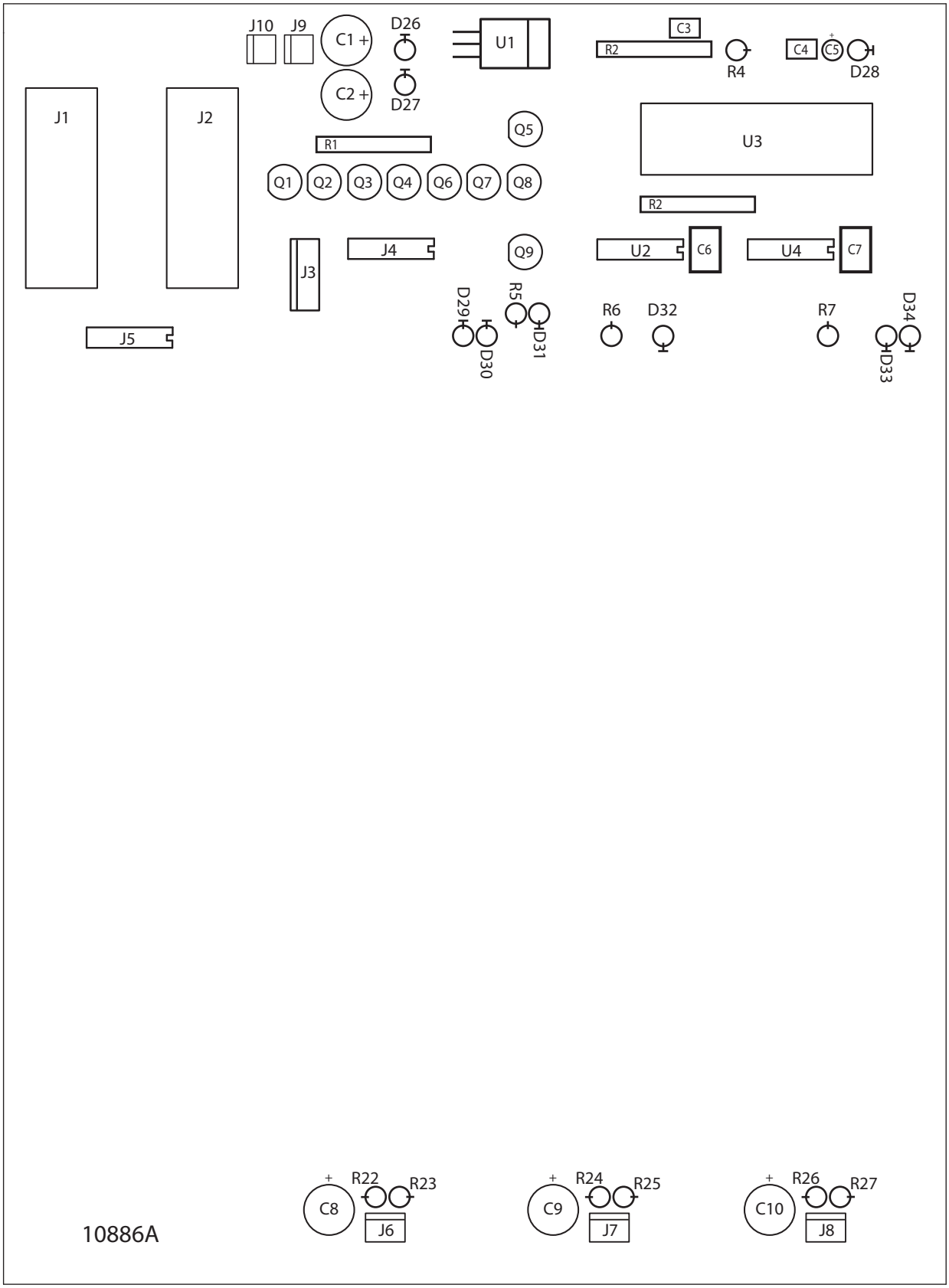

radio SYSTEMS
Logan Township, NJ

MILLENIUM
RS-D CONSOLE

F-8

TITLE: MONITOR BOARD		
TYPE: PARTS LAYOUT		
DATE: 9-1-2007	PART NO: 15277	REV: A

MONITOR BOARD PARTS LIST

LINE	PART #	DESCRIPTION REFERENCE DESIGNATION	QTY.
3	10886	PCB MONITOR BD	1
20	7602	SHOULDERWASHER FOR TO 220	25
30	5744	CAP 100UF 25V RAD 20% Ref: C1;C2;C8;C9;C10	5
40	5743	CAP .1UF FILM Ref: C3;C6;C7	3
50	9124	CAP 100 PF SILVER MICA Ref: C4	1
60	8191	CAP 10UF 35V ELEC Ref: C5	1
70	15831	3MM WHITE LED HI BRIGHTNESS Ref: D1;D2;D3;D4;D5;D6;D7;D8;D9;D10;D11;D12;D13;D14; D15;D16;D17;D18;D19;D20;D21;D22;D23;D24;D25	25
80	7012	DIODE 1N4005 Ref: D26	1
90	7786	DIODE 1N4735A Ref: D27	1
100	1012	DIODE 1N4148 Ref: D28;D29;D30;D31;D32;D33;D34	7
110	10928	15 PIN D SUB PC MT STRAIGHT Ref: J1;J2	2
120	5890	HEADER 7 PIN MTA .1 Ref: J3	1
130	11157	RESISTOR NETWORK DIP 680 OHMS Ref: J5	1
140	5892	HEADER 3 PIN MTA .1 Ref: J6;J7;J8	3
150	7050	HEADER 2 PIN MTA .1 Ref: J9;J10	2
160	10328	TRANSISTOR 2N7000 Ref: Q1;Q2;Q3;Q4;Q5;Q6;Q7;Q8;Q9	9
170	10326	RES NETWORK 10K Ref: R1;R2;R3	3
180	5872	RES 1.0K 1/4W 1% Ref: R22;R24;R26	3
190	1143	RES 100 OHM 1/4W 1% Ref: R23;R25;R27	3
200	7514	RES 3.32K 1/4W 1% Ref: R4	1
210	7533	RES 220 OHM 1/4W 5% Ref: R5;R6;R7	3
220	1039	SOCKET 16 PIN DIP Ref: REF;U2;U4;J4;J5	4
230	8228	SOCKET 40 PIN IC Ref: REF;U3	1
240	3679	VR 7805 Ref: U1	1
250	10891	IC 74HC147N Ref: U2;U4	2
260	11046	IC PROGRAMMED MONITOR BD Ref: U3	1

REVISION RECORD			
LTR	ECO NO:	APPROVED:	DATE:
B	ADD C14, C15		5-9-03

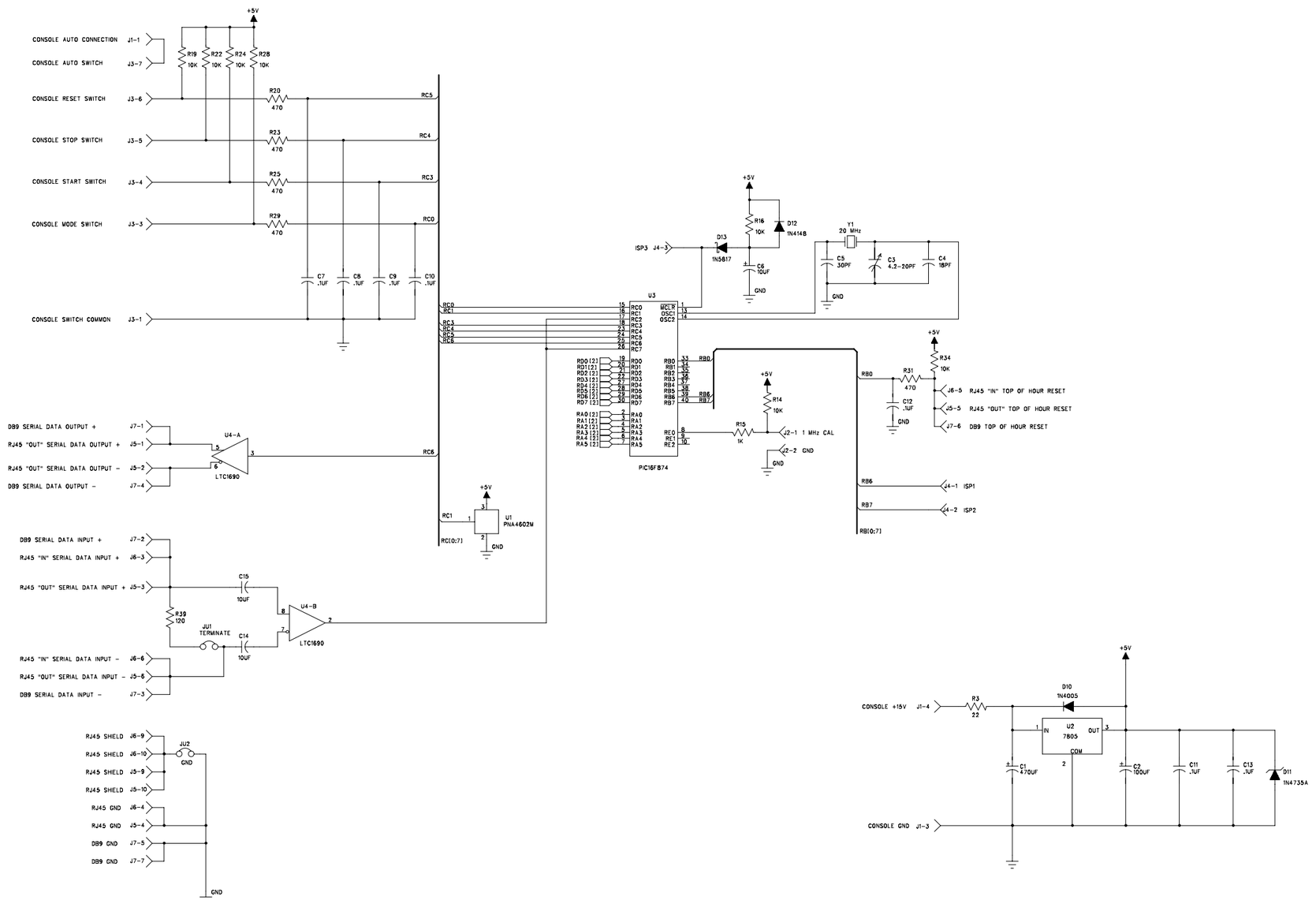

COMPANY: RADIO SYSTEMS INC			
TITLE: CLOCK/TIMER CT2002 CONSOLE VERSION			
DRAWN: SIRKIS	DATED: 4-4-02		
CHECKED:	DATED:	CODE:	SIZE: D
QUALITY CONTROL:	DATED:	DRAWING NO: BLANK BOARD 14400B ASSEMBLY 14401B	REV:
RELEASED:	DATED:	SCALE: NONE	SHEET: 1 OF 2

REVISION RECORD			
LTR	ECO NO:	APPROVED:	DATE:
B	ADD C14, C15		5-9-03

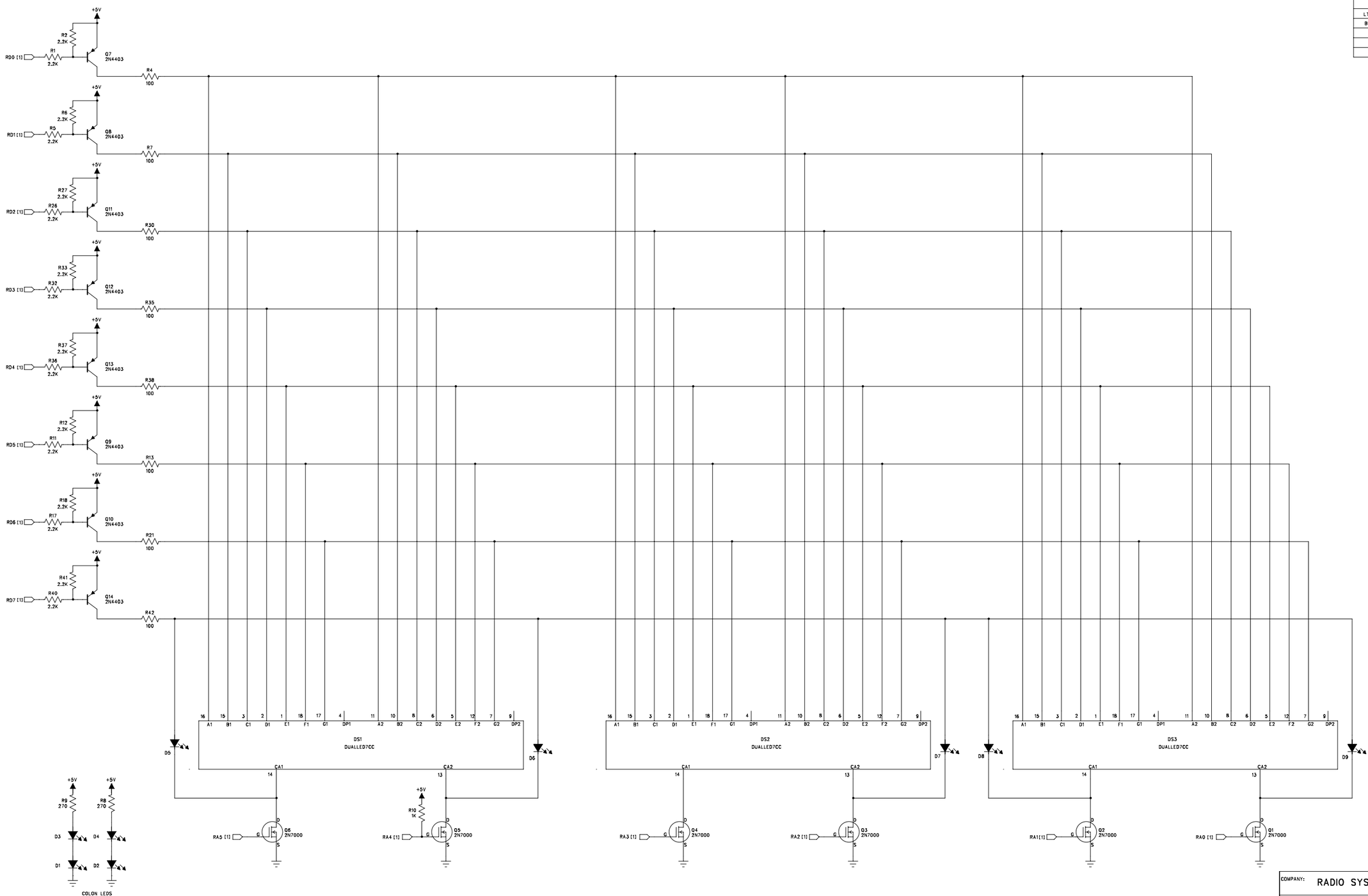

DRAWN: SIRKIS	DATED: 4-4-02	COMPANY: RADIO SYSTEMS	
CHECKED:	DATED:	TITLE: CLOCK/TIMER CT2002 CONSOLE VERSION	
QUALITY CONTROL:	DATED:	CODE:	SIZE: D / DRAWING NO: BLANK BOARD 14400B ASSEMBLY 14401B / REV:
RELEASED:	DATED:	SCALE: NONE	SHEET: 2 OF 2

F-11

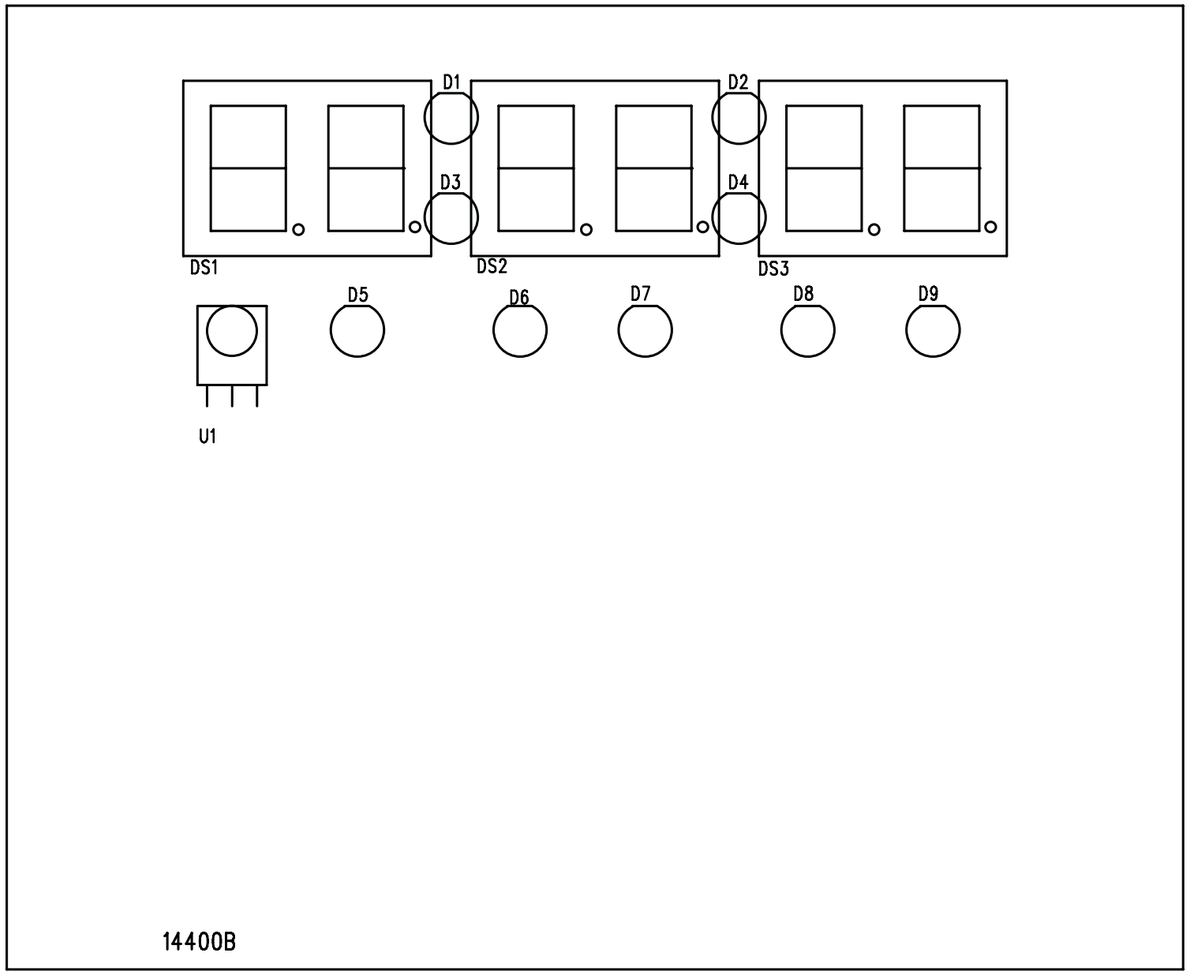

CT2002 CLOCK/TIMER CONSOLE VERSION
BLANK BOARD 14400B
ASSEMBLY 14401B

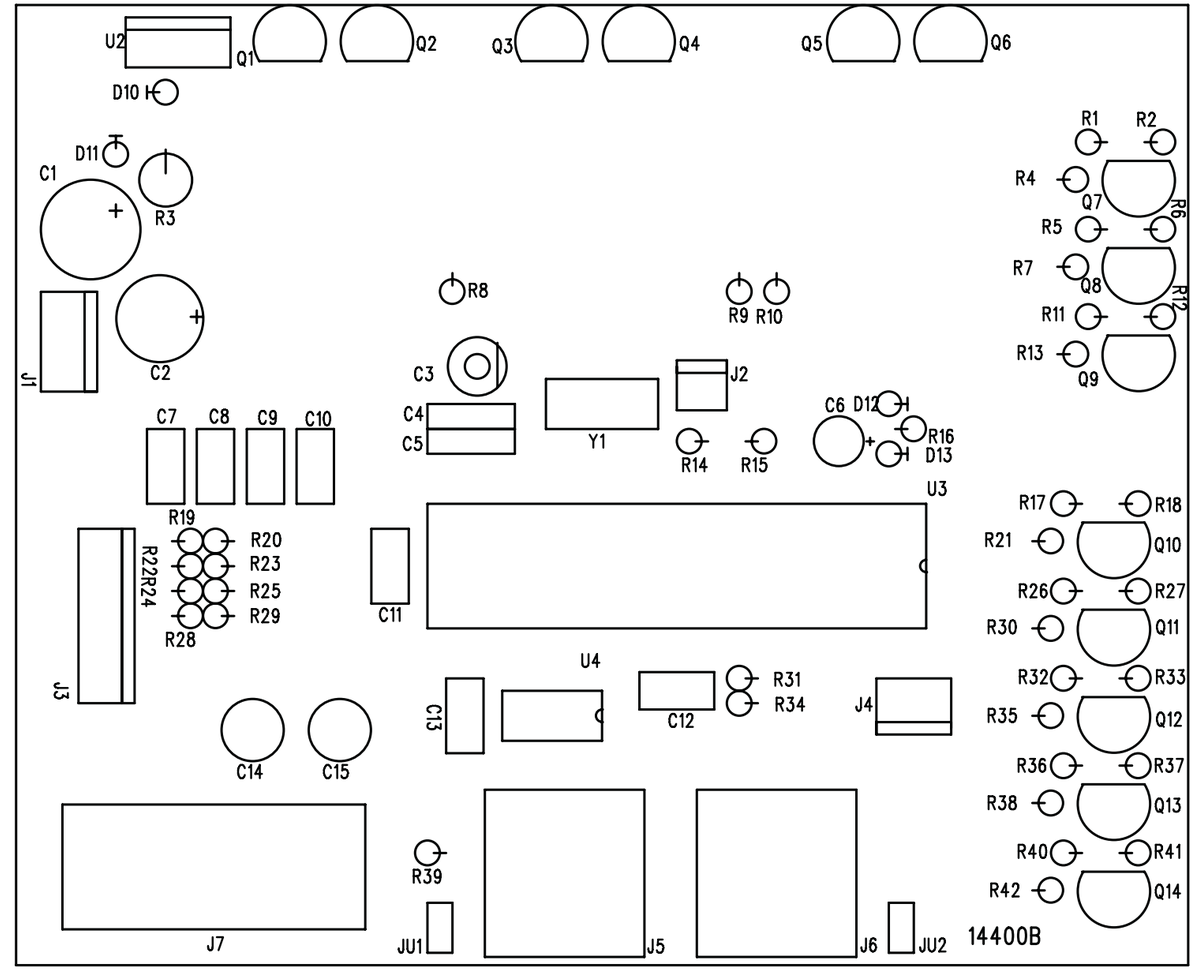

CT2002 CLOCK/TIMER CONSOLE VERSION
BLANK BOARD 14400B
ASSEMBLY 14401B

CT-2002 CLOCK/TIMER PARTS LIST

LINE	PART #	DESCRIPTION REFERENCE DESIGNATION	QTY.
10	14400	CT-2002 CONSOLE C/T DETAIL	1
20	5729	RES 2.21K 1/4W 1% Ref: R1;R2;R5;R6;R12;R11;R18;R17;R27;R26;R33;R32;R37;R36;R41;R40	16
30	2816	RES 10.0K 1/4W 1% Ref: R22;R28;R24;R34;R14;R16;R19	7
40	1143	RES 100 OHM 1/4W 1% Ref: R4;R7;R13;R35;R21;R38;R30;	7
50	1030	RES 470 OHM 1/4W 5% Ref: R20;R23;R25;R29;R31	5
60	9806	RES 120 OHM 1/4W 5% Ref: R39	1
70	3558	RES 5.11K 1/4W 1% Ref: R8;R9	2
80	5872	RES 1.0K 1/4W 1% Ref: R10;R15	2
90	10815	RES 22 OHM 3W 5% Ref: R3	1
100	5743	CAP .1UF FILM Ref: C7 THRU C13	7
110	8192	CAP 30PF SILVER MICA Ref: C5	1
120	7012	DIODE 1N4005 Ref: D10	1
130	1012	DIODE 1N4148 Ref: D12	1
140	9330	DIODE 1N5817 Ref: D13	1
150	7786	DIODE 1N4735A Ref: D11	1
160	13051	3MM RED LED HI BRIGHTNESS Ref: D1 THRU D9	9
170	10927	CAP 4.2-20PF TRIMMER Ref: C3	1
180	10797	LED DUAL SEVEN SEGMENT RED Ref: DS1;DS2;DS3	3
190	5744	CAP 100UF 25V RAD 20% Ref: C2	1
200	8191	CAP 10UF 35V ELEC Ref: C6	1
220	6119	TRANSISTOR 2N4403 Ref: Q7 THRU Q14	8
230	10328	TRANSISTOR 2N7000 Ref: Q1 THRU Q6	6

LINE	PART #	DESCRIPTION REFERENCE DESIGNATION	QTY.
240	3679	VR 7805 Ref: U2	1
260	14505	IC LTC1690 Ref: U4	1
270	14359	PHOTODETECTOR Ref: U1	1
280	1011	SOCKET 8 PIN DIP Ref: REF;U4	1
290	8228	SOCKET 40 PIN IC Ref: REF; U3	1
300	11338	RJ45 VERTICAL SHIELDED Ref: J5;J6	2
310	14504	CONNECTOR 9 PIN D FEMALE Ref: J7	1
320	7050	HEADER 2 PIN MTA .1 Ref: J2	1
330	5892	HEADER 3 PIN MTA .1 Ref: J4	1
340	7051	HEADER 4 PIN MTA .1 Ref: J1	1
350	5890	HEADER 7 PIN MTA .1 Ref: J3	1
360	7903	HEADER 2 PIN SINGLE ROW .1 Ref: JU1;JU2	2
370	2846	HEAT SINK T0-220 Ref: REF; U2	1
390	9292	NUT KEP #4 Ref: REF; U2	1
400	7601	SIL-PAD TO-220 Ref: REF;U2	1
410	11073	LED SPACER Ref: REF; D5 THRU D9	5
420	5758	JUMPER PLUG .1 Ref: REF; JU1;JU2	2
430	7535	CAP 470 UF 25V ELEC Ref: C1	1
440	13132	CRYSTAL 20 MHZ Ref: Y1	1
450	11072	LED SPACER Ref: REF;D1;D2;D3;D4	4
480	7281	CAP 18PF SILVER MICA Ref: C4	1
490	14506	IC PIC16F874 Ref: U3	1

LINE	PART #	DESCRIPTION REFERENCE DESIGNATION	QTY.
500	9320	SCREW PHIL PH 4-40 X 5/16 Ref: REF; U2	1
510	1014	CAP 10UF 25V NP Ref: C14;C15	2
520	7792	RES 1.62K 1/4W 1%	1

REVISION RECORD			
LTR	ECO NO:	APPROVED:	DATE:
B	ADD W1		1-9-05

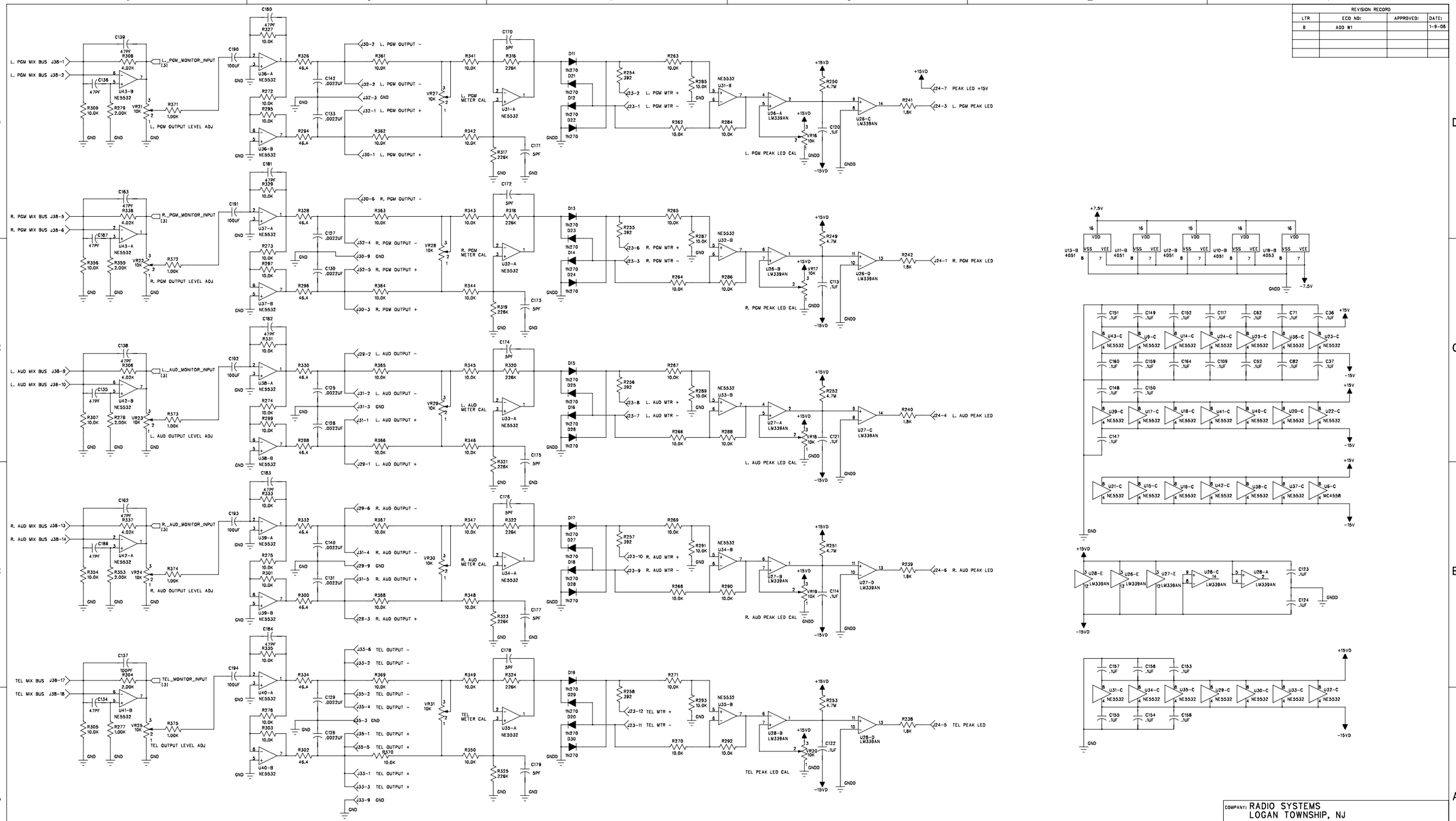

DRAWN: SIRKIS	DATED: 3-19-2003	COMPANY: RADIO SYSTEMS LOGAN TOWNSHIP, NJ	
CHECKED:	DATED:	TITLE: MILLENIUM OUTPUT BOARD	
QUALITY CONTROL:	DATED:	CODE: / SIZE: D / DRAWING NO: BLANK BOARD 147988; ASSEMBLY MILLENIUM-A 5 PIN 153718; ASSEMBLY MILLENIUM-A RJ45 153728; ASSEMBLY MILLENIUM-D 5 PIN 153738; ASSEMBLY MILLENIUM-D RJ45 153748	REV:
RELEASED:	DATED:	SCALE: FULL	SHEET: 1 OF 3

REVISION RECORD			
LTR	ECO NO:	APPROVED:	DATE:
B	ADD W1		1-9-06

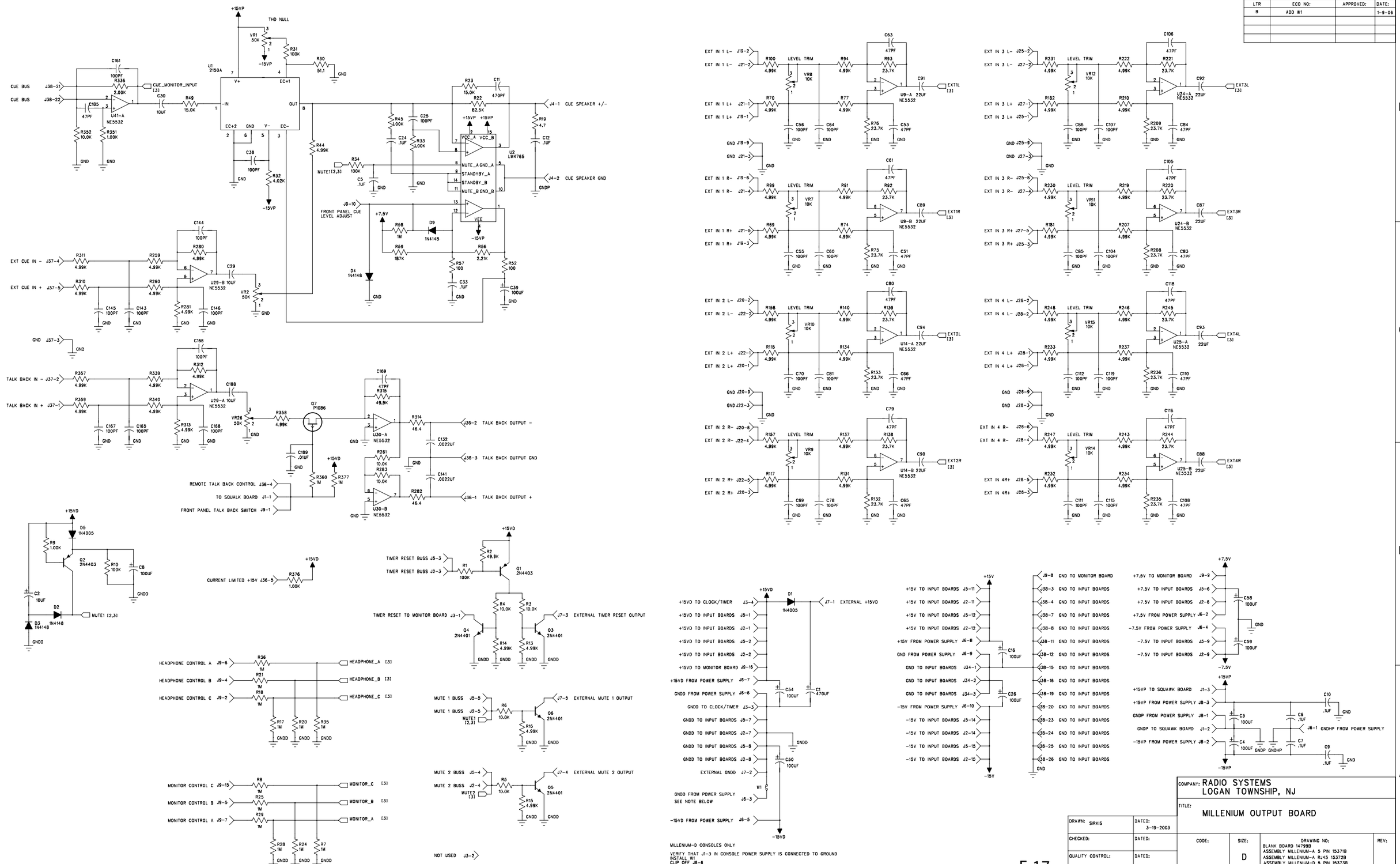

F-17

DRAWN: SIRKIS	DATED: 3-19-2003	COMPANY: RADIO SYSTEMS LOGAN TOWNSHIP, NJ	
CHECKED:	DATED:	TITLE: MILLENIUM OUTPUT BOARD	
QUALITY CONTROL:	DATED:	CODE: / SIZE: D / DRAWING NO: BLANK BOARD 147999; ASSEMBLY MILLENUM-A 5 PIN 153718; ASSEMBLY MILLENUM-A RJ45 153728; ASSEMBLY MILLENUM-D 5 PIN 153738; ASSEMBLY MILLENUM-D RJ45 153748	REV:
RELEASED:	DATED:	SCALE: FULL	SHEET: 2 OF 3

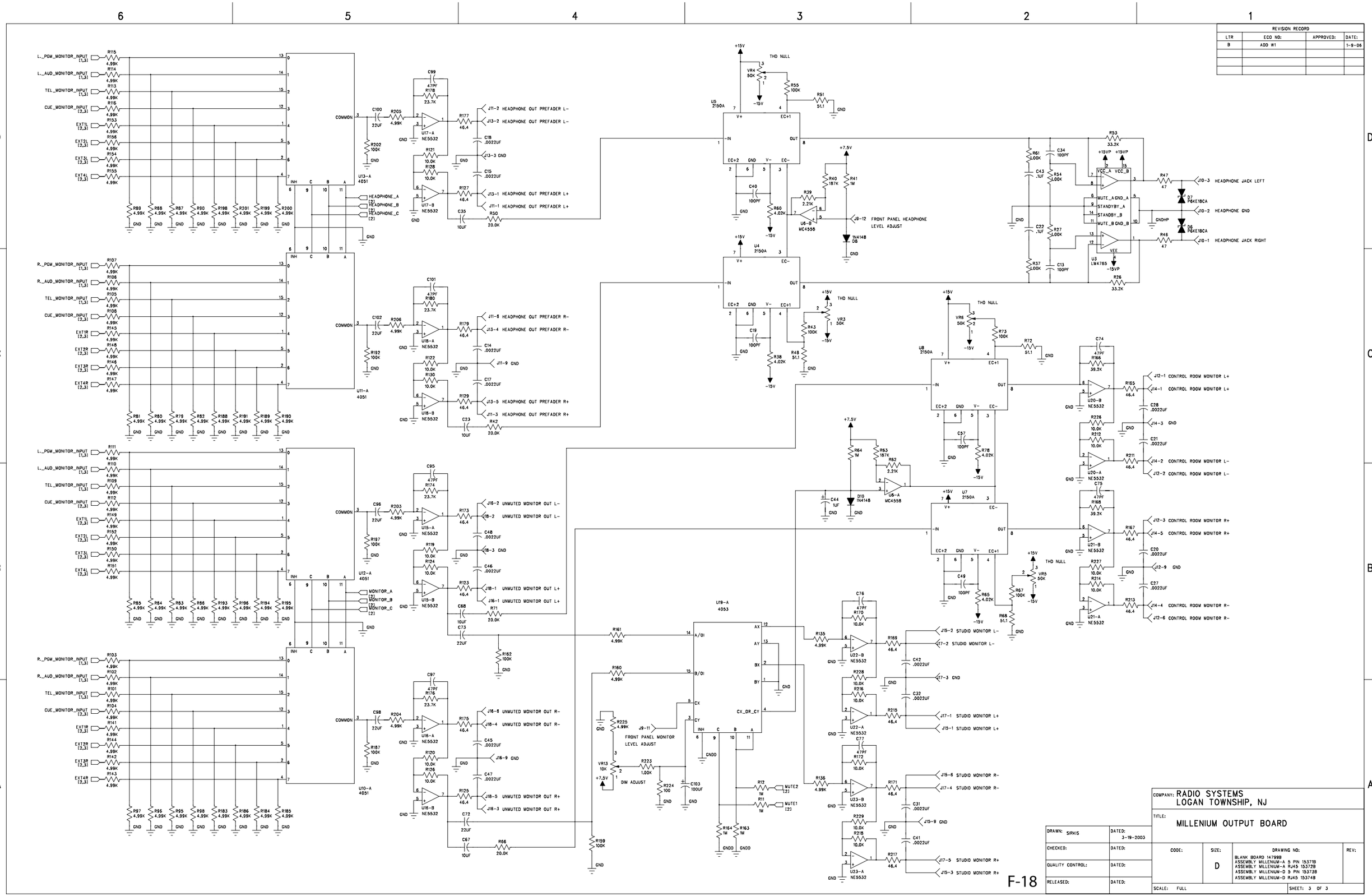

REVISION RECORD			
LTR	ECO NO:	APPROVED:	DATE:
B	ADD W1		1-9-06

COMPANY: RADIO SYSTEMS
LOGAN TOWNSHIP, NJ

TITLE: MILLENIUM OUTPUT BOARD

DRAWN: SIRKIS	DATED: 3-19-2003	CODE:	SIZE: D	DRAWING NO: BLANK BOARD 147998 ASSEMBLY MILLENIUM-A 5 PIN 153718 ASSEMBLY MILLENIUM-A RJ45 153728 ASSEMBLY MILLENIUM-D 5 PIN 153738 ASSEMBLY MILLENIUM-D RJ45 153748
CHECKED:	DATED:			
QUALITY CONTROL:	DATED:			
RELEASED:	DATED:	SCALE: FULL		SHEET: 3 OF 3

REV:

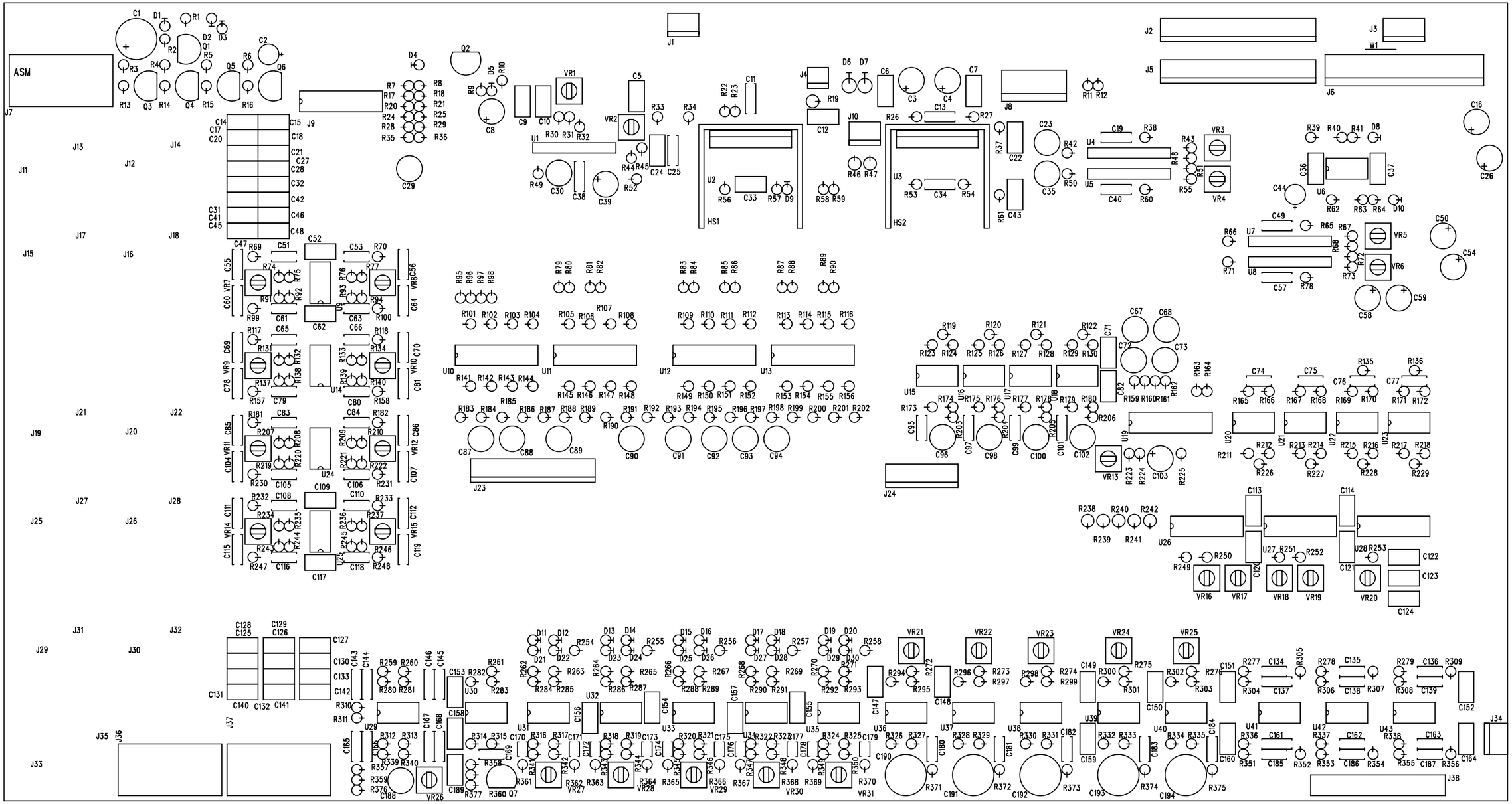

MILLENIUM OUTPUT BOARD
BLANK BOARD 14799B
ASSEMBLY MILLENIUM-A 5 PIN 15371B
ASSEMBLY MILLENIUM-A RJ45 15372B
ASSEMBLY MILLENIUM-D 5 PIN 15373B
ASSEMBLY MILLENIUM-D RJ45 15374B

Analog Output Board Parts List

LINE	PART #	DESCRIPTION REFERENCE DESIGNATION	QTY.
10	14799	MILLENIUM OUTPUT BOARD DETAIL	1
20	2828	RES 4.7 OHM 1/2W 5% Ref: R19	1
30	1009	RES 47 OHM 1/2W 5% Ref: R46;R47	2
40	8883	RES 1.8K 1/2W 5% Ref: R242;R241;R240;R238;R239	5
50	5876	RES 100K 1/4W 1% Ref: R34;159;162;187;192;197;202;1;10	9
60	10813	RES 4.99K 1/4W 1% Ref: R15;R16;R44;69;70;74;77;79-91;94-118;131;134-137;140-158	66
70	10813	RES 4.99K 1/4W 1% Ref: R160;161;181-186;188-191;193-196;13;198-201;14;203-207;210 219;222;225;230-234;237;243;246-248;259;260;280;281;310-313 339;340;357-359	57
80	5716	RES 1.0 MEG 1/4W 1% Ref: R8;21;24;25;28;29;163;164;35;36;11;12;41;17;58;64;7;360;377 R18;R20	21
90	5723	RES 4.02K 1/4W 1% Ref: R78;38;60;306;308;65;337;338;32	9
100	5873	RES 46.4 OHM 1/4W 1% Ref: R173;175;177;179;165;211;213;215;217;123;125;127;129;282;294 296;298;300;302;167;169;314;326;328;330;332;334;171	28
110	5726	RES 20.0K 1/4W 1% Ref: R50;R42;R66;R71	4
120	8794	RES 221 OHM 1/4 W 1% Ref: R31;R55;R43;R73;R67	5
130	2816	RES 10.0K 1/4W 1% Ref: R229;119-122;216;4;124;218;126;214;128;212;261-276;130; 283-293	50
140	2816	RES 10.0K 1/4W 1% Ref: R295;297;299;301;303;305;307;309;5;327;226;329;331;333;335; 170;341-350;352;354;356;227;228;6;3;361-370;172	35
150	5872	RES 1.0K 1/4W 1% Ref: R33;37;277;223;351;9;45;61;27;54;371-376	16
160	8813	RES 226K 1/4W 1% Ref: R319-325;316-318	10
170	1143	RES 100 OHM 1/4W 1% Ref: R224;57;52	3
180	9299	RES 2.0K 1/4W 1% Ref: R336;278;353;355;279;304	6
190	5882	RES 4.7M 1/4W 5% Ref: R253;249-252	5
200	5729	RES 2.21K 1/4W 1% Ref: R56;62;39	3
210	14810	RES 23.7K 1/4W 1% Ref: R209;76;178;176;180;220;221;235;236;244;245;92;93;174;208; 132;133;75;138;139	20
220	5727	RES 15.0K 1/4W 1% Ref: R49;23	2
230	5734	RES 187K 1/4W 1%	3
240	5725	RES 392 OHM 1/4W 1% Ref: R256;254;257;258;255	5
250	7512	RES 82.5K 1/4W 1% Ref: R22	1

LINE	PART #	DESCRIPTION REFERENCE DESIGNATION	QTY.
260	7513	RES 49.9K 1/4W 1% Ref: R315;R2	2
270	10383	CAP 5PF DISC 500V 5% NPO Ref: C170-C179	10
280	7482	CAP 470PF 50V DISK Ref: C11	1
290	5739	CAP 100PF DISC 5% 100V Ref: C13;19;25;34;38;40;49;55-57;60;64;69;70;78;81;85;86;104;107 111;112;115;119;137;143-146;161;165-168	34
300	5743	CAP .1UF FILM Ref: C5-7;9;10;12;22;24;33;36;37;43;52;62;71;82;109;113;114;117; 120-124;147-160;164	40
310	5863	CAP .0022UF 50V FILM Ref: C45;125-133;140-142;46-48;14;15;27;28;31;32;17;18;20;41;42;	28
320	5860	CAP .01UF 5% 50V FILM Ref: C189	1
330	5744	CAP 100UF 25V RAD 20% Ref: C2;C3;4;8;16;26;39;50;54;58;59;103	12
340	7012	DIODE 1N4005 Ref: D1;D5	2
350	1012	DIODE 1N4148 Ref: D2;D3;D4;D8;D9;D10	6
360	7535	CAP 470 UF 25V ELEC Ref: C1	1
370	15339	DIODE 1N270 Ref: D11-D30	20
380	5865	CAP 1UF 20% 50V ELECT Ref: C44	1
390	14824	TRANSIENT VOLTAGE SUPPRESSOR Ref: D6;D7	2
400	5751	TRANSISTOR P1086 Ref: Q7	1
410	6118	TRANSISTOR 2N4401 Ref: Q3;Q4;Q5;Q6	4
420	14850	POT 50K TOP ADJ Ref: VR1;VR2;VR3;VR4;VR5;VR6;VR26	7
430	6119	TRANSISTOR 2N4403 Ref: Q1;Q2	2
440	7995	POT 10K TOP ADJUST Ref: VR8-VR25;VR7;VR27-VR31	24
450	1014	CAP 10UF 25V NP Ref: C23;29;30;35;67;68;188	7
460	15340	IC VCA 2181LB Ref: U1;U4;U5;U7;U8	5
470	1049	CAP 100UF 25V NP Ref: C190-194	5
480	1011	SOCKET 8 PIN DIP Ref: REF; U6;U9;U14;U15;U16;U17;U18;U20;U21;U22;U23;U24;U25;U29	14
490	1011	SOCKET 8 PIN DIP Ref: REF;U30;U31;U32;U33;U34;U35;U36;U37;U38;U39;U40;U41;U42;U43	14
500	1039	SOCKET 16 PIN DIP Ref: U10;U11;U12;U13;U19;J9	6
510	13049	IC LM4765T Ref: U2;U3	2
520	1027	SOCKET 14 PIN DIP Ref: REF;U26;U27;U28	3

LINE	PART #	DESCRIPTION REFERENCE DESIGNATION	QTY.
530	1010	IC 5532 Ref: U9;U14-U18;U20-U25;U29-U43	27
540	3675	IC 4558 Ref: U6	1
550	1042	IC LM339N Ref: U26;U27;U28	3
560	6120	IC 4051 Ref: U10;U11;U12;U13	4
570	5752	IC 4053 Ref: U19	1
580	5756	HEADER 26 PIN DUAL ROW .1 Ref: J38	1
590	5753	HEADER 5 PIN Ref: J7;36;37	3
600	11338	RJ45 VERTICAL SHIELDED Ref: J11;J12;J15;J16;J19;J20;J25;J26;J29;J30;J33	11
610	7050	HEADER 2 PIN MTA .1 Ref: J4	1
620	5892	HEADER 3 PIN MTA .1 Ref: J1;J10;J34	3
630	7051	HEADER 4 PIN MTA .1 Ref: J3	1
640	5890	HEADER 7 PIN MTA .1 Ref: J24	1
650	5891	HEADER 12 PIN MTA .1 Ref: J23	1
660	5749	HEADER 15 PIN MTA .1 Ref: J2;J5	2
670	7502	HEADER 4 PIN MTA .156 Ref: J8	1
680	5893	HEADER 10 PIN MTA .156 Ref: J6	1
690	7872	HEAT SINK RS OUTPUT BOARD Ref: REF;U2;U3	2
700	13047	SIL-PAD LARGE TO-220 Ref: REF; U2;U3	2
710	7646	KEP NUT #6 Ref: REF; U2;U3	2
720	9142	SCREW PH PHIL 6-32 X 1/4 Ref: REF; U2;U3	2
730	14892	CAP 47PF 100V NP0 (.20 LEAD) Ref: C51;53;61;63;65;66;74-77;79;80;83;84;95;97;99;101;105;106; 108;110;116;118;134;135;136;138;139;162;163;169;180-187	40
740	7518	RES 39.2K 1/4W 1% Ref: R166;R168	2
750	9048	RES 33.2K 1/4W 1% Ref: R26;R53	2
760	9662	CAP 22UF 25V NP Ref: C73;87-94;96;98;100;102;72	14

REVISION RECORD			
LTR	ECO NO:	APPROVED:	DATE:

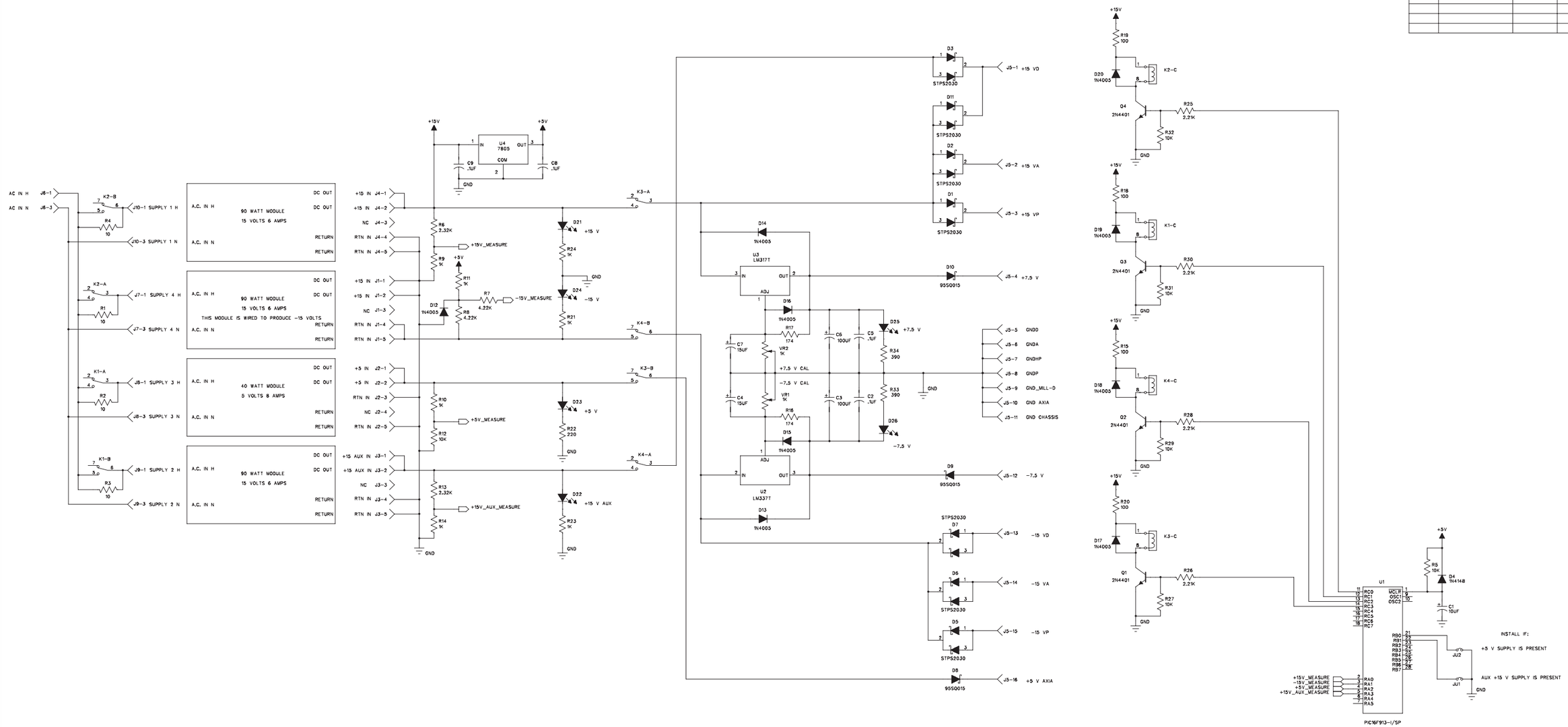

DRAWN: SIRKIS	DATED: 4-13-2007	COMPANY: RADIO SYSTEMS LOGAN TOWNSHIP, NJ	
		TITLE: MILLENIUM CONSOLE SWITCHING SUPPLY INTERFACE	
CHECKED:	DATED:	CODE:	SIZE: D
QUALITY CONTROL:	DATED:	DRAWING NO: BLANK BOARD 16222 ASSEMBLY +/-15 16223 ASSEMBLY +/-15 & +5 16224 ASSEMBLY +/-15 & +15 AUX 16225 ASSEMBLY +/-15 & +5 & +15 AUX 16226	REV:
RELEASED:	DATED:	SCALE: NONE	SHEET: 1 OF 1

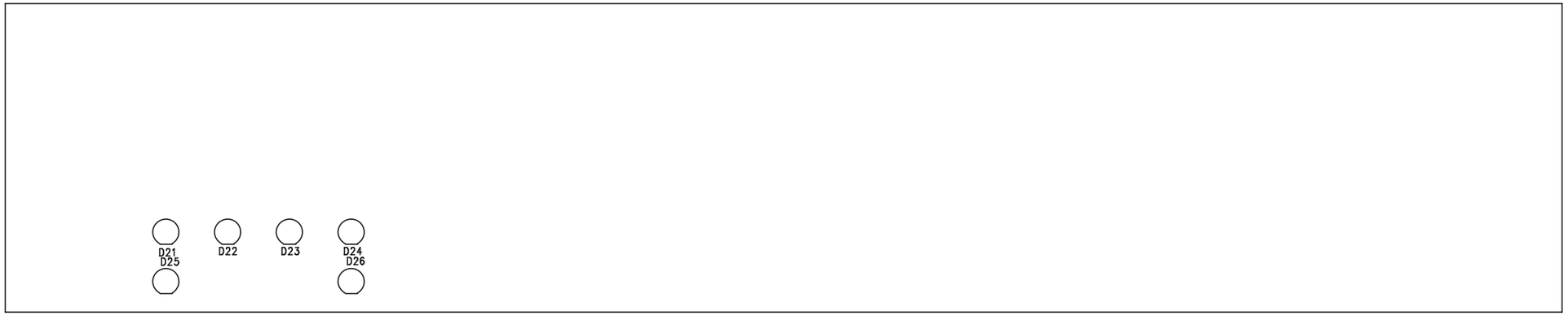

RADIO SYSTEMS
LOGAN TWP, NJ
MILLENIUM CONSOLE SWITCHING POWER SUPPLY CONTROLLER
BLANK BOARD 16222A
ASSEMBLY +15/-15 16223A
ASSEMBLY +15/-15 & +5 16224A
ASSEMBLY +/-15 & +15 AUX 16225A
ASSEMBLY +/-15 & +5 & +15 AUX 16225A
ASSEMBLY TOP

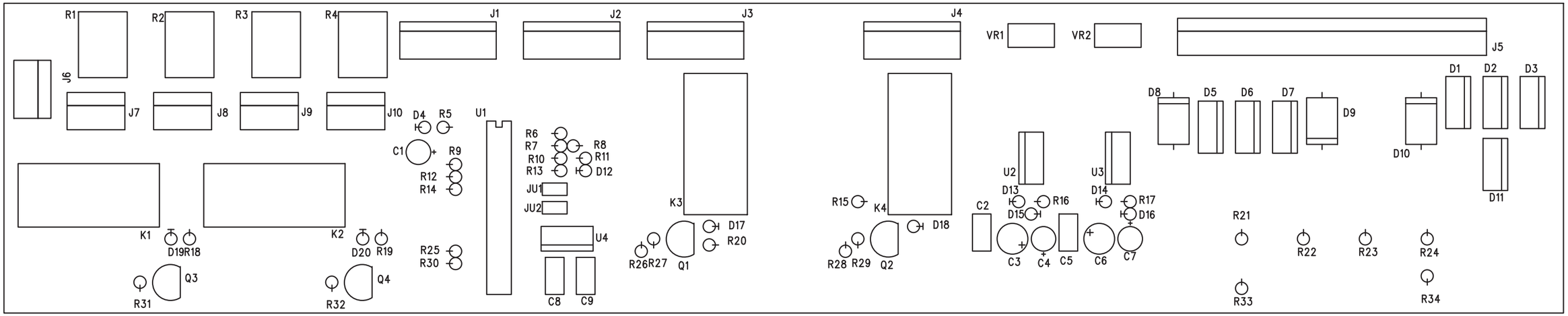

RADIO SYSTEMS
LOGAN TWP, NJ
MILLENIUM CONSOLE SWITCHING POWER SUPPLY CONTROLLER
BLANK BOARD 16222A
ASSEMBLY +15/−15 16223A
ASSEMBLY +15/−15 & +5 16224A
ASSEMBLY +/−15 & +15 AUX 16225A
ASSEMBLY +/−15 & +5 & +15 AUX 16225A
ASSEMBLY BOTTOM

POWER SUPPLY INTERFACE PARTS LIST

LINE	PART #	DESCRIPTION REFERENCE DESIGNATION	QTY.
10	16219	MILLENUIM D SWITCH PS CHASSIS	1
20	16220	MILLENUIM D SWITCH PS FRT PNL	1
21	8551	SCREW 10-32 X 1/2" BLACK OXIDE	4
22	9291	NUT KEP 10 10-32	4
30	16221	MILLENUIM D SWITCH PS COVER	1
35	16182	SCREW 4-40 X 1/4 TAPTITE	8
40	16209	POWER SUPPLY 15V 6.6A SWITCHER	2
45	8047	SCREW 6-32 X 5/8 PH PHIL	8
46	1093	WASHER LOCK #6	8
50	16451	CORCOM EMI FILTER	1
51	1091	SCREW 6-32 3/8 PANHEAD	2
60	16223	MILLENUIM D SWITCH BD #1	1
65	11315	SCREW 6-32 X 1/4 PH PHIL ITLW	6
70	9937	HOUSING 3 PIN .156	5
80	16453	HOUSING 12 PIN .156	2
90	11485	HOUSING 5 PIN MTA .156	2
100	11486	KEYING PLUG MTA .156	2
140	1154	NUT KNURL 6-32	2
150	2919	SCREW 6-32 X 1/2 PH PHIL	2
160	7646	KEP NUT #6	2
180	9155	POWER CABLE 3-COND TO IEC	1
190	16470	POWER SUPPLY CABLE PS-DIGITAL	1
210	1155	LUG #6 SOLDER	2
220	15156	RICHCO SNAP RIVET BLACK	2
230	16566	CONSOLE POWER SUPPLY BOX	1
240	16567	CONSOLE P/S FOAM END CAPS	2
250	16536	CABLE PS-DIGITAL POWER	1

REVISION RECORD			
LTR	ECO NO:	APPROVED:	DATE:

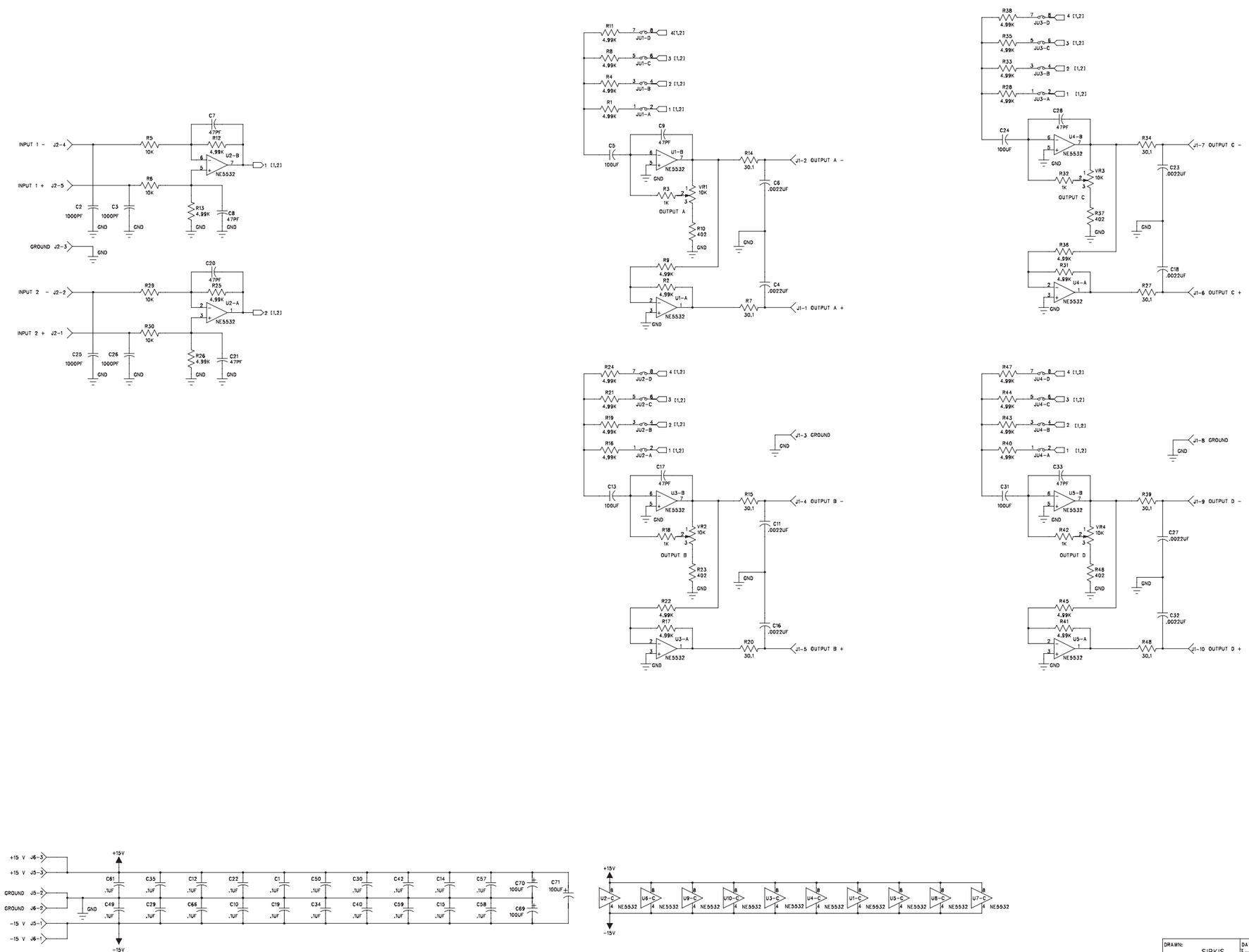

F-27

DRAWN: SIRKIS	DATED: 3-21-2007	COMPANY: RADIO SYSTEMS LOGAN TOWNSHIP, NJ	
CHECKED:	DATED:	TITLE: MILLENIUM DA/MIXER SMT	
QUALITY CONTROL:	DATED:	CODE: / SIZE: D / DRAWING NO: BLANK BOARD 16448 ASSEMBLY 16449	REV:
RELEASED:	DATED:	SCALE: NONE	SHEET: 1 OF 2

REVISION RECORD			
LTR	ECO NO:	APPROVED:	DATE:

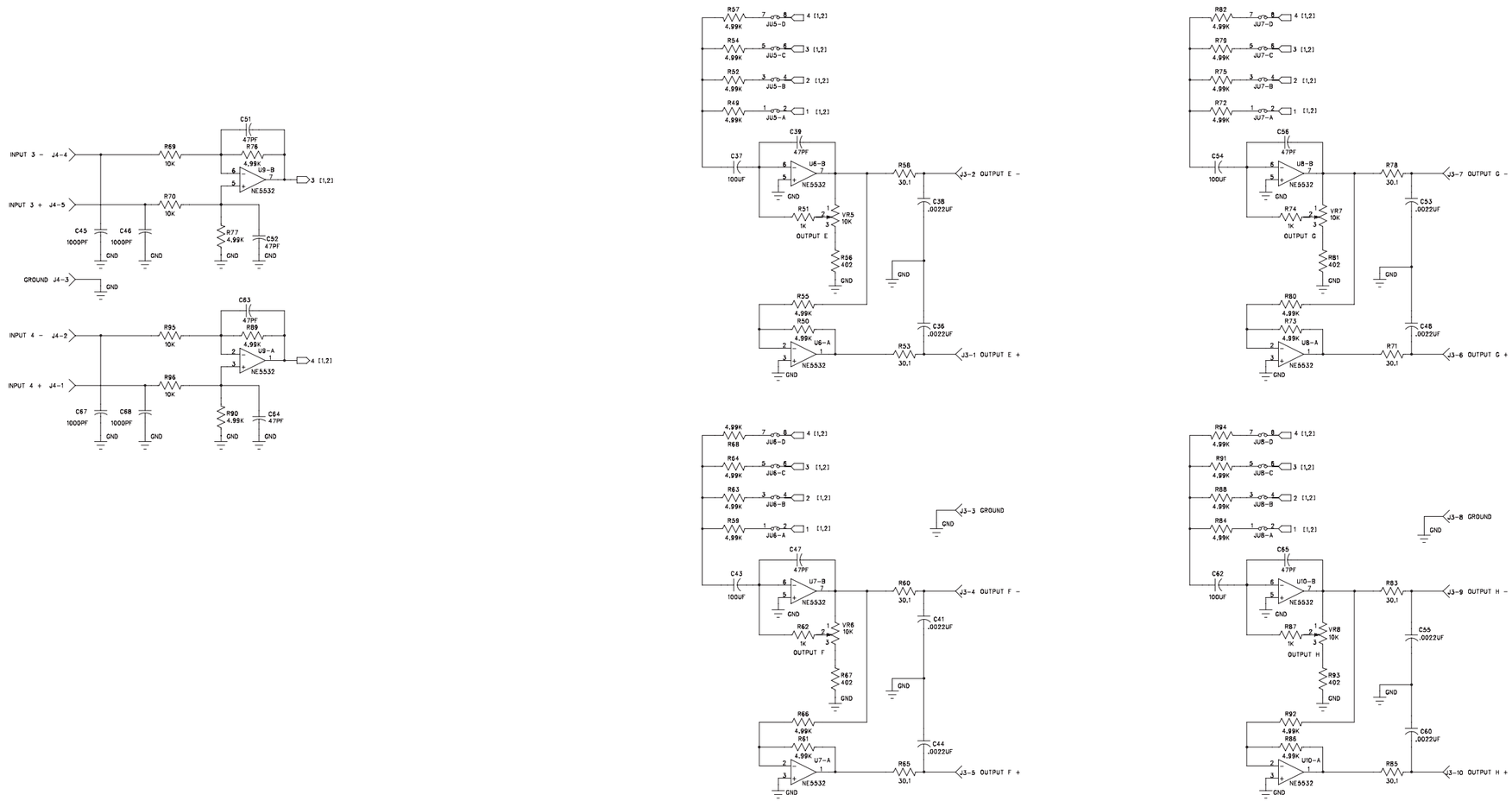

F-28

DRAWN: SIRKIS	DATED: 3-21-2007	COMPANY: RADIO SYSTEMS	
CHECKED:	DATED:	TITLE: MILLENIUM DA/MIXER SMT	
QUALITY CONTROL:	DATED:	CODE: / SIZE: D / DRAWING NO: BLANK BOARD 16448, ASSEMBLY 16449	REV:
RELEASED:	DATED:	SCALE: NONE	SHEET: 2 OF 2

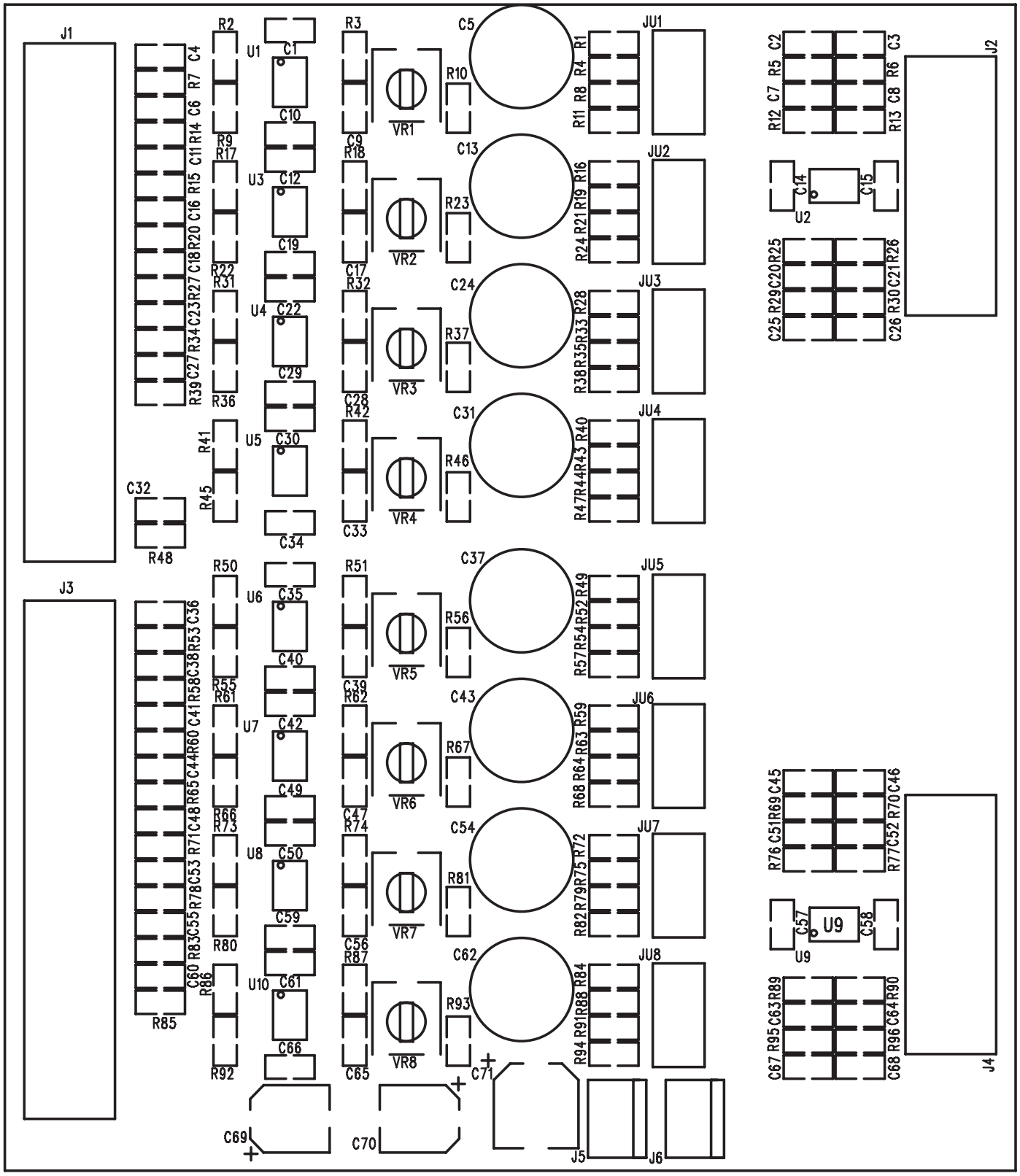

redio SYSTEMS Logan Township, NJ	TITLE: DA MIXER BOARD
MILLENIUM RS-D CONSOLE	TYPE: PARTS LAYOUT
	DATE: 9-1-2007 PART NO: 16448 REV:

CONSOLE DA MIXER PARTS LIST

LINE	PART #	DESCRIPTION REFERENCE DESIGNATION	QTY.
10	16448	RS MILLENIUM CONSOLE DA DETAIL	1
20	16513	RES SMT 4.99K OHM Ref: R1;2;4;8;9;11;12;13;16;17;19;21;22;24;25;26;28;31;33;35;36 38;40;41;43;44;45;47;49;50;52;54;55;57;59;61;63;64;66;68;72	42
30	16513	RES SMT 4.99K OHM Ref: 75;76;77;79;80;82;84;86;88;89;90;91;92;94	14
40	16350	RES SMT 30.1 OHM 1/8W 1% Ref: R34;R58;R20;R60;R7;R65;R39;R71;R14;R15;R27;R78;R48;R83;R85 R53	16
50	16019	RES SMT 1.0K 1/8W 1% Ref: R42;R74;R3;R87;R51;R18;R62;R32	8
60	16400	RES SMT 402 OHM Ref: R81;R37;R67;R23;R46;R10;R93;R56	8
70	16020	RES SMT 10K 1/8W 1% Ref: R29;R69;R30;R6;R5;R70;R95;R96	8
80	16005	CAP SMT .1UF 50V CERM X7R Ref: C1;C10;C12;C14;C15;C19;C22;C29;C30;C34;C35;C40;C42;C49;C50; C57;C58;C59;C61;C66	20
90	16347	CAP SMT .0022PF 50V CERM Ref: C23;C27;C32;C11;C36;C38;C4;C41;C6;C44;C48;C16;C53;C55;C18; C60	16
100	16346	CAP SMT 47PF 50V CERM Ref: C33;C47;C28;C17;C51;C52;C9;C39;C56;C7;C20;C21;C63;C64;C65; C8	16
110	16053	CAP SMT 1000PF 50V CERM Ref: C26;C46;C25;C2;C3;C45;C67;C68	8
120	16152	CAP SMT 100UF 25V ELEC Ref: C69;C70	2
130	16153	CAP SMT 100UF 50V ELECT Ref: C71	1
140	16063	IC SMT NE5532D Ref: U1;U2;U3;U4;U5;U6;U7;U8;U9;U10	10
150	16405	POT SMT TRIM 10K 6MM Ref: VR1;VR2;VR3;VR4;VR5;VR6;VR7;VR8	8
160	7076	HEADER 8 PIN DUAL ROW .1 Ref: JU1;JU2;JU3;JU4;JU5;JU6;JU7;JU8	8
170	5758	JUMPER PLUG .1 Ref: JU1 THRU JU8	32
180	5892	HEADER 3 PIN MTA .1 Ref: J5;J6	2
190	7790	TERMINAL BLOCK 5 PIN Ref: J1;J2;J3;J4	6
200	1049	CAP 100UF 25V NP Ref: C5;C13;C24;C31;C37;C43;C54;C62	8

REVISION RECORD			
LTR	ECO NO:	APPROVED:	DATE:

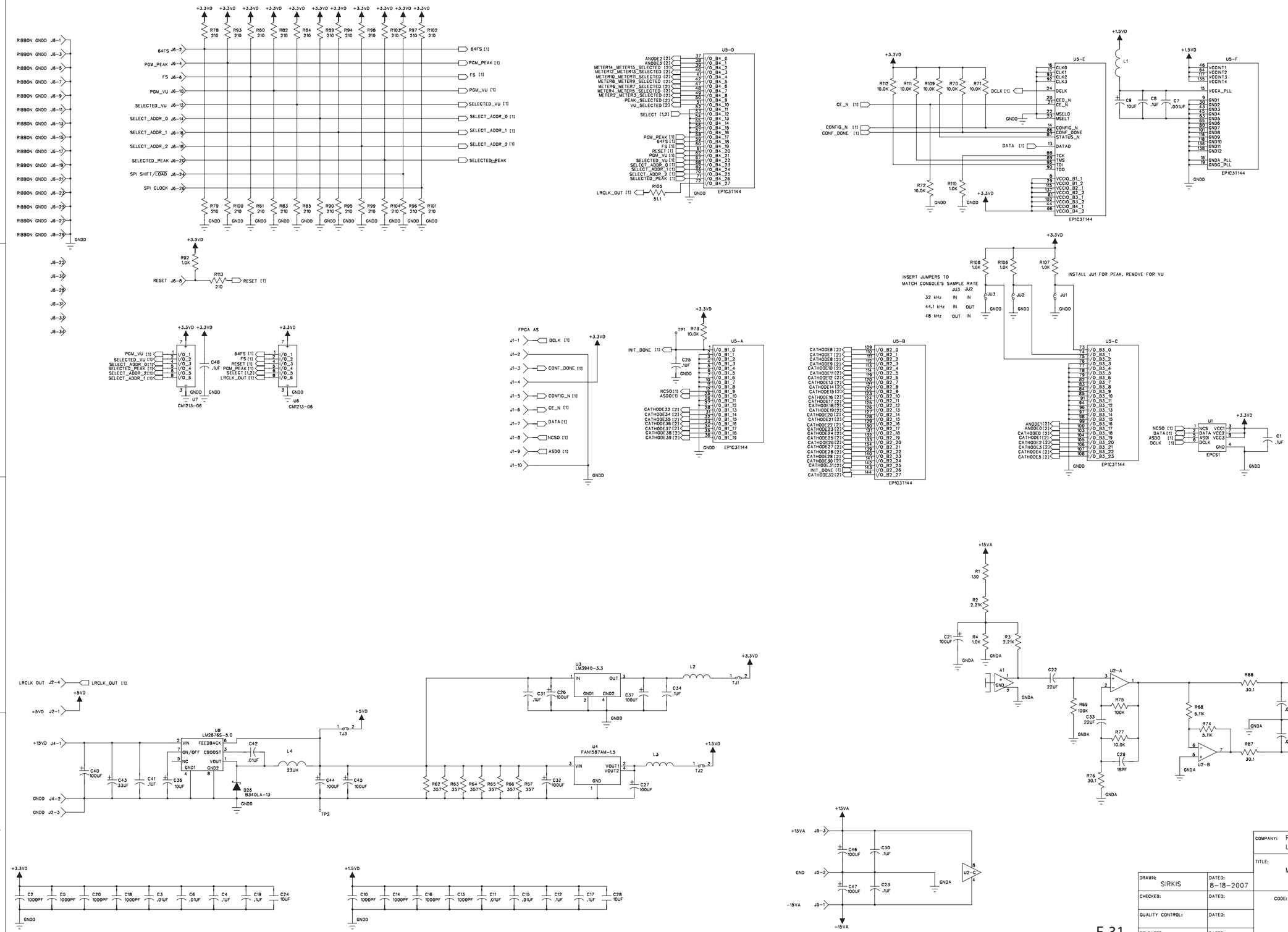

COMPANY: RADIO SYSTEMS LOGAN TOWNSHIP, NJ			
TITLE: MILLENIUM-D DIGITAL VU METER BOARD			
DRAWN: SIRKIS	DATED: 8-18-2007		
CHECKED:	DATED:	CODE:	SIZE: D
QUALITY CONTROL:	DATED:	DRAWING NO: BLANK BOARD 16635B ASSEMBLY 16636B	REV:
RELEASED:	DATED:		
SCALE: NONE		SHEET: 1 OF 2	

F-31

REVISION RECORD			
LTR	ECO NO:	APPROVED:	DATE:

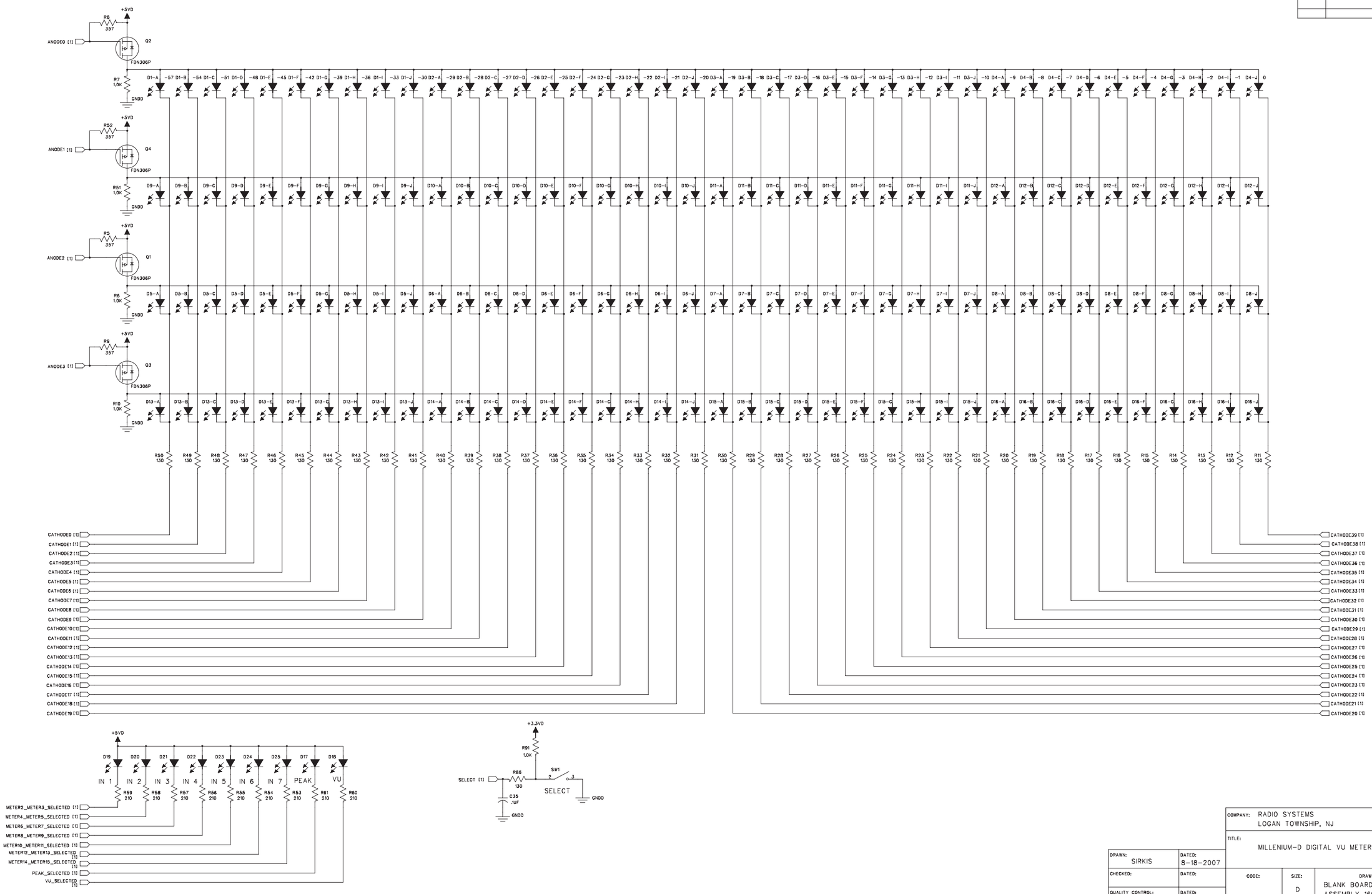

COMPANY: RADIO SYSTEMS LOGAN TOWNSHIP, NJ			
TITLE: MILLENIUM-D DIGITAL VU METER BOARD			
DRAWN: SIRKIS	DATED: 8-18-2007		
CHECKED:	DATED:	CODE:	SIZE: D
QUALITY CONTROL:	DATED:	DRAWING NO: BLANK BOARD 16635B ASSEMBLY 16636B	REV:
RELEASED:	DATED:	SCALE: NONE	SHEET: 2 OF 2

Millenium Digital Console Specifications

Models Available

RS-6d: 6 Channel RS-12d: 12 Channel RS-18d: 18 Channel

Measurements are made with 600 ohm loads connected to the analog outputs.

0 dBu equals 0.775 volts RMS independent of load impedance, 0 dBm equals 0.775 volts into a 600 ohm load.

Reference Level: +4dBu equals -20 dBFS. FSD equals Full Scale Digital equals +24 dBu

Analog Line Inputs

Input Impedance:
40 k ohms, instrumentation amplifier balanced

Input Level Range:
jumper selectable nominal input level of -16 dBu, -6dBu or +4 dBu

Input Level Trim:
software trim (digital gain adjust) +/-12.5 dB.

Input Headroom:
20 dB above nominal input

Analog Monitor Inputs

Input Impedance:
10 k ohms minimum, differentially balanced

Input Level Range:
Adjustable +4 dBu nominal, -10 dBu minimum

Input Headroom:
20 dB above nominal input

Microphone Preamplifiers

Input Impedance:
10 k ohmsSource Impedance: 150 ohms

Input Level Range:
Selectable in 5 dB steps, -62 dBu to - 22dBu

Equivalent Input Noise:
-128 dBu, 150 ohm source, 20 kHz measurement bandwidth

Input Headroom:
20 dB above nominal inputAnalog Outputs

Output Source Impedance:
Utility Buses <3 ohms balanced, all others 90 ohms.

Output Load Impedance:
600 ohms minimum

Nominal Output Level:
+4 dBu

Maximum Output Level:
+24 dB

Digital Inputs

Signal Format:
AES-3, S/PDIF

Signal Compliance:
24 bit

Input Sample Rate:
32 kHz - 96 kHz, sample rate conversion is provided for all digital inputs

Input Level:
-20 dBFS nominal

Input Level Trim:
software trim (digital gain adjust) +/-12.5 dB.

Input Headroom:
20 dB above nominal input

Digital Outputs

Signal Format:
AES-3

Signal Compliance:
24 bit Output Sample Rate: 48 kHz

Digital Reference:
Crystal (internal) or external AES-3 input at 48 kHz 100 ppm

Internal Sample Rate:
48 kHz

Processing Resolution:
32 bit floating point DSP

Conversions:
A/D 24-bit, Delta-Sigma, 256x oversampling; D/A 24-bit, Delta-Sigma, 256x oversampling

Latency:
<1.0 ms, analog in to analog out

Frequency Response

Line Input to Program or Utility Output:
+0 dB/-0.5 dB, 20 Hz to 20 kHz

Microphone Input to Program or Utility Output:
+0dB/-.5dB, 20 Hz to 20 kHz

Dynamic RangeAnalog Input to Analog Output:
106 dB referenced to FSD, 22 kHz measurement bandwidth, 109 dB “A” weighted

Analog Input to Digital Output:
109 dB referenced to FSD, 22 kHz measurement bandwidth, 112 dB “A” weighted

Digital Input to Analog Output:
109 dB referenced to FSD, 22 kHz measurement bandwidth, 112 dB “A” weighted

Digital Input to Digital Output:
123 dB referenced to FSD, 22 kHz measurement bandwidth, 126 dB “A” weighted

Total Harmonic Distortion + Noise

Analog Input to Analog Output:
<0.008%, 20 Hz to 20 kHz, +23 dBu input, +23 dBu output, 22 kHz measurement bandwidth

Analog Input to Digital Output:
<0.004%, 20 Hz to 20 kHz, +23 dBu input, +23 dBu output, 22 kHz measurement bandwidth

Digital Input to Digital Output:
<0.0005%, 20 Hz to 20 kHz, -1 dBFS input, -1 dBFS output, 22 kHz measurement bandwidth

Digital Input to Analog Output:
<0.004%, 20 Hz to 20 kHz ,-1 dBFS input, +23 dBu output, 22 kHz measurement bandwidth

Isolation

Program-to-Program or Program-to-Utility:
>88 dB, 20 Hz to 20 kHz A Input to B Input, B Input to A Input, >100 dB

Stereo Separation

Analog Program Outputs:
>88 dB, 20 Hz to 20 kHz

Millenium Digital Consoles Parts Ordering

Digital Consoles		**Part #**
Model RS-6D5P	6 Channel Digital Console with 5 Pin I/O connectors	RS-6D5P
Model RS-6DRJ	6 Channel Digital Console with RJ-45 I/O connectors	RS-6DRJ
Model RS-12D5P	12 Channel Digital Console with 5 Pin I/O connectors	RS-12D5P
Model RS-12DRJ	12 Channel Digital Console with RJ-45 I/O connectors	RS-12DRJ
Model RS-18D5P	18 Channel Digital Console with 5 Pin I/O connectors	RS-18D5P
Model RS-18DRJ	18 Channel Digital Console with RJ-45 I/O connectors	RS-18DRJ
Digital Console Accessories		
RS-6d 6 Channel Console	Copy Stand	COPY-6D
	Spare Power Supply	PS-CONSOLE
	StudioHub+ Harness	Call
RS-12d 12 Channel Console	Copy Stand	COPY-18D
	Spare Power Supply	PS-CONSOLE
	StudioHub+ Harness	Call
RS-18d 18 Channel Console	Copy Stand	COPY-18D
	Spare Power Supply	PS-CONSOLE
	StudioHub+ Harness	Call
System Options		
Hot Standby Power Supply		PS-DIGITALHS
Enhanced Interface Card		REMOTE
Four Source Switcher Card		ROUTER
Intercom Card		INTERCOM
Intercom Speaker		7696
DA Card		DA-MIXER
Penny & Giles Fader Option		P&G
Accessory Relay - Mechanical		4PDT
Accessory Relay - Electrical		SPDT
Colored Fader Knobs	Blue	11203
	White	11167
	Red	11166
	L. Blue	14735
	Grey	14734
Replacement Parts		
Auxiliary Meter		15258
Spare Semiconductor Parts Kit		15325
Discount Spare Parts Kit #1		15326
Discount Spare Parts Kit #2		15327
Front Panel Control Board		10887
Front Panel Monitor Board		10882
Input Mother Board	5-pin version	14904
	RJ-45 version	14905
Digital Input Plug-in Card		15304
Analog Input Plug-in Card		15303
Analog Output Board	5-pin version	14800
	RJ-45 version	15328
Digital Output Board	5-pin version	15305
	RJ-45 version	15306
Linear Fader		10898
Rotary Pot Assembly		11025
On/Off Rubber Keypad		15273
Input/Bus Select Keypad		15272
Monitor Select Keypad		15274
Cue Speaker Assembly		7563
Headphone Jack Assembly		7548
Remote Extender Cable		15330

Millenium Consoles - Warranty and Repair Policies Warranty

Radio Systems, Inc., warrants this equipment to be free from defects in materials and workmanship for a period of two (2) years for all electronic parts and subassemblies and a period of one (1) year for all mechanical parts such as faders and meters..

This warranty extends to first users of the product and future owners who purchase the product within the warranty period.

The terms of this warranty are null and void if this product is stored or operated in an environment not conducive to electronic equipment, or shows signs of misuse or modifications which affect the proper functioning of the product. This warranty does not apply to damage caused by fire, smoke, flood, lightning, or acts of nature and physical abuse.

Radio Systems, Inc., and its associated companies, authorized distributors, and personnel are not liable for loss of revenues or other damages, or effects to the broadcast signal quality or coverage which may result from the from the improper functioning of this product.

Repair Policy

Technical assistance is available at any time, at no charge, by phone or correspondence.

During the warranty period, there will be no charge for parts or service made to units which show no sign of misuse by customer or lightning caused damage. The customer is responsible for the cost of shipping their unit back to Radio Systems for repair.

During the warranty period, shipment of small parts and assemblies will be made at no charge to the user. Emergency, next day shipments of replacement parts and circuits will also be made at no charge at the user's request . Chargeable services will be made COD or on Net-30 day terms to users with established accounts.

During the warranty period, users must return defective parts upon request to receive no-charge warranty services. Return shipping expenses are the responsibility of the user.

Return Instructions

Contact Radio Systems for a return authorization number.

Pack all items carefully and ship prepaid, via UPS insured, to:

Radio Systems, Inc.

Attn: R.A. # _____

601 Heron Drive

Logan Twp., NJ 08085

Enclose a note which includes your name, company, phone number, the serial number, return address (no box numbers), and a complete description of the problem.

Millenium - Digital Console Software

Overview

Install the Millenium control software in your PC by inserting the CD and clicking on the “INSTALL” icon. Use the included RS-232 D to RJ-45 adapter (RS part # 15329) and CAT-5 patch cord to connect the com port of your PC to the Main RS-232 connector located on the RJ-45 jack on the digital output board.

Multiple Console Connection

Note that the Millenium-D serial line uses the RS-232 multi-drop protocol, allowing one serial line to be connected in parallel to multiple Millenium-D consoles. Each console must be set with a unique ID #. The last (or only) console should have the serial port terminated. Consult the “Communications” software page in this section of the manual for more information.

Establish Communication

On the “Select Console” pull-down menu, select “console 1.”

When communication is established, the top menu bar will immediately display the console number.

If no console number is displayed, check that you have selected com port #1 via your PC set-up, check that RS-232 wiring is accurate, or check the console ID. Consult the “Select Console” software page in this section of the manual for more information.

Channel Settings

Use this menu to set channel “Cue Exclusive” functions and input and pre-fader levels.

Consult the “Channel Settings” software page in this section of the manual for more information.

Output Level

Use this menu to set analog and digital Program and Utility bus output levels.

Consult the “Output Level” software page in this section of the manual for more information.

Utility Buses

Use this menu to set analog the 10 utility buses main and alternate mix configurations

Consult the “Utility Buses” software page in this section of the manual for more information.

8 Position Switches

Use this menu to program the function of the 8 position switcher on the console front panel.

Consult the example pages which follow this page for suggested applications and the “8 Position Switches” software page in this section of the manual for more information.

Communications / Serial COM Port / Help Screens

Use these final 3 menus to set com port ID’s, factory defaults and obtain help information. Consult the “Communications,” “Serial COM Port,” and “Help Screens” software pages in this section of the manual for more information.

Utility Bus (mix-minus) - typical use setup illustrations
Creating mix-minus and additional stereo bus (DA) feeds from utility buses

#1 Main Utility Bus Setup Screen - Example #1 - Creating a "standard" mix-minus bus

		CHANNEL	1	2	3	4	5	6	7	8	9	10	11	12	13	14	15	16	17	18	19	20	21	22	23	24	ALL
INPUT A	CHANNEL OFF	PREFADER LEFT	☐	☐	☐	☐	☐	☐	☐	☐	☐	☐	☐	☐	☐	☐	☐	☐	☐	☐	☐	☐	☐	☐	☐	☐	☐
		PREFADER RIGHT	☐	☐	☐	☐	☐	☐	☐	☐	☐	☐	☐	☐	☐	☐	☐	☐	☐	☐	☐	☐	☐	☐	☐	☐	☐
		POSTFADER LEFT	☐	☐	☐	☐	☐	☐	☐	☐	☐	☐	☐	☐	☐	☐	☐	☐	☐	☐	☐	☐	☐	☐	☐	☐	☐
		POSTFADER RIGHT	☐	☐	☐	☐	☐	☐	☐	☐	☐	☐	☐	☐	☐	☐	☐	☐	☐	☐	☐	☐	☐	☐	☐	☐	☐
	CHANNEL ON	PREFADER LEFT	☐	☐	☐	☐	☐	☐	☐	☐	☐	☐	☐	☐	☐	☐	☐	☐	☐	☐	☐	☐	☐	☐	☐	☐	☐
		PREFADER RIGHT	☐	☐	☐	☐	☐	☐	☐	☐	☐	☐	☐	☐	☐	☐	☐	☐	☐	☐	☐	☐	☐	☐	☐	☐	☐
		POSTFADER LEFT	☑	☑	☑	☑	☑	☑	☑	☑	☑	☐	☑	☑	☐	☐	☐	☐	☐	☐	☐	☐	☐	☐	☐	☐	☐
		POSTFADER RIGHT	☑	☑	☑	☑	☑	☑	☑	☑	☑	☐	☑	☑	☐	☐	☐	☐	☐	☐	☐	☐	☐	☐	☐	☐	☐
	BUS SELECT	PROGRAM	☑	☑	☑	☑	☑	☑	☑	☑	☑	☐	☑	☑	☐	☐	☐	☐	☐	☐	☐	☐	☐	☐	☐	☐	☐
		AUDITION	☐	☐	☐	☐	☐	☐	☐	☐	☐	☐	☐	☐	☐	☐	☐	☐	☐	☐	☐	☐	☐	☐	☐	☐	☐
		TELEPHONE	☐	☐	☐	☐	☐	☐	☐	☐	☐	☐	☐	☐	☐	☐	☐	☐	☐	☐	☐	☐	☐	☐	☐	☐	☐
		NO BUS SELECTED	☐	☐	☐	☐	☐	☐	☐	☐	☐	☐	☐	☐	☐	☐	☐	☐	☐	☐	☐	☐	☐	☐	☐	☐	☐
INPUT B	CHANNEL OFF	PREFADER LEFT	☐	☐	☐	☐	☐	☐	☐	☐	☐	☐	☐	☐	☐	☐	☐	☐	☐	☐	☐	☐	☐	☐	☐	☐	☐
		PREFADER RIGHT	☐	☐	☐	☐	☐	☐	☐	☐	☐	☐	☐	☐	☐	☐	☐	☐	☐	☐	☐	☐	☐	☐	☐	☐	☐
		POSTFADER LEFT	☐	☐	☐	☐	☐	☐	☐	☐	☐	☐	☐	☐	☐	☐	☐	☐	☐	☐	☐	☐	☐	☐	☐	☐	☐
		POSTFADER RIGHT	☐	☐	☐	☐	☐	☐	☐	☐	☐	☐	☐	☐	☐	☐	☐	☐	☐	☐	☐	☐	☐	☐	☐	☐	☐
	CHANNEL ON	PREFADER LEFT	☐	☐	☐	☐	☐	☐	☐	☐	☐	☐	☐	☐	☐	☐	☐	☐	☐	☐	☐	☐	☐	☐	☐	☐	☐
		PREFADER RIGHT	☐	☐	☐	☐	☐	☐	☐	☐	☐	☐	☐	☐	☐	☐	☐	☐	☐	☐	☐	☐	☐	☐	☐	☐	☐
		POSTFADER LEFT	☐	☐	☐	☐	☐	☐	☐	☐	☐	☐	☐	☐	☐	☐	☐	☐	☐	☐	☐	☐	☐	☐	☐	☐	☐
		POSTFADER RIGHT	☐	☐	☐	☐	☐	☐	☐	☐	☐	☐	☐	☐	☐	☐	☐	☐	☐	☐	☐	☐	☐	☐	☐	☐	☐
	BUS SELECT	PROGRAM	☐	☐	☐	☐	☐	☐	☐	☐	☐	☐	☐	☐	☐	☐	☐	☐	☐	☐	☐	☐	☐	☐	☐	☐	☐
		AUDITION	☐	☐	☐	☐	☐	☐	☐	☐	☐	☐	☐	☐	☐	☐	☐	☐	☐	☐	☐	☐	☐	☐	☐	☐	☐
		TELEPHONE	☐	☐	☐	☐	☐	☐	☐	☐	☐	☐	☐	☐	☐	☐	☐	☐	☐	☐	☐	☐	☐	☐	☐	☐	☐
		NO BUS SELECTED	☐	☐	☐	☐	☐	☐	☐	☐	☐	☐	☐	☐	☐	☐	☐	☐	☐	☐	☐	☐	☐	☐	☐	☐	☐

THIS IS UTILITY BUS 1 MAIN.
USE THIS BUS IN CONJUNCTION WITH UTILITY BUS 6 MAIN TO FORM A STEREO PAIR.

To use as a "standard" mix-minus bus (e.g. hybrid or CODEC):

For this application, set all channels EXCEPT the two-way device's channel being fed this mix-minus (in this illustration Channel 10) - for A (or B) input / post on/off / post fader / program only.

#1 Main Utility Bus Setup Screen - Example #2 - Creating an additional stereo output bus

		CHANNEL	1	2	3	4	5	6	7	8	9	10	11	12	13	14	15	16	17	18	19	20	21	22	23	24	ALL
INPUT A	CHANNEL OFF	PREFADER LEFT	☐	☐	☐	☐	☐	☐	☐	☐	☐	☐	☐	☐	☐	☐	☐	☐	☐	☐	☐	☐	☐	☐	☐	☐	☐
		PREFADER RIGHT	☐	☐	☐	☐	☐	☐	☐	☐	☐	☐	☐	☐	☐	☐	☐	☐	☐	☐	☐	☐	☐	☐	☐	☐	☐
		POSTFADER LEFT	☐	☐	☐	☐	☐	☐	☐	☐	☐	☐	☐	☐	☐	☐	☐	☐	☐	☐	☐	☐	☐	☐	☐	☐	☐
		POSTFADER RIGHT	☐	☐	☐	☐	☐	☐	☐	☐	☐	☐	☐	☐	☐	☐	☐	☐	☐	☐	☐	☐	☐	☐	☐	☐	☐
	CHANNEL ON	PREFADER LEFT	☐	☐	☐	☐	☐	☐	☐	☐	☐	☐	☐	☐	☐	☐	☐	☐	☐	☐	☐	☐	☐	☐	☐	☐	☐
		PREFADER RIGHT	☐	☐	☐	☐	☐	☐	☐	☐	☐	☐	☐	☐	☐	☐	☐	☐	☐	☐	☐	☐	☐	☐	☐	☐	☐
		POSTFADER LEFT	☑	☑	☑	☑	☑	☑	☑	☑	☑	☑	☑	☑	☐	☐	☐	☐	☐	☐	☐	☐	☐	☐	☐	☐	☐
		POSTFADER RIGHT	☐	☐	☐	☐	☐	☐	☐	☐	☐	☐	☐	☐	☐	☐	☐	☐	☐	☐	☐	☐	☐	☐	☐	☐	☐
	BUS SELECT	PROGRAM	☑	☑	☑	☑	☑	☑	☑	☑	☑	☑	☑	☑	☐	☐	☐	☐	☐	☐	☐	☐	☐	☐	☐	☐	☐
		AUDITION	☐	☐	☐	☐	☐	☐	☐	☐	☐	☐	☐	☐	☐	☐	☐	☐	☐	☐	☐	☐	☐	☐	☐	☐	☐
		TELEPHONE	☐	☐	☐	☐	☐	☐	☐	☐	☐	☐	☐	☐	☐	☐	☐	☐	☐	☐	☐	☐	☐	☐	☐	☐	☐
		NO BUS SELECTED	☐	☐	☐	☐	☐	☐	☐	☐	☐	☐	☐	☐	☐	☐	☐	☐	☐	☐	☐	☐	☐	☐	☐	☐	☐
INPUT B	CHANNEL OFF	PREFADER LEFT	☐	☐	☐	☐	☐	☐	☐	☐	☐	☐	☐	☐	☐	☐	☐	☐	☐	☐	☐	☐	☐	☐	☐	☐	☐
		PREFADER RIGHT	☐	☐	☐	☐	☐	☐	☐	☐	☐	☐	☐	☐	☐	☐	☐	☐	☐	☐	☐	☐	☐	☐	☐	☐	☐
		POSTFADER LEFT	☐	☐	☐	☐	☐	☐	☐	☐	☐	☐	☐	☐	☐	☐	☐	☐	☐	☐	☐	☐	☐	☐	☐	☐	☐
		POSTFADER RIGHT	☐	☐	☐	☐	☐	☐	☐	☐	☐	☐	☐	☐	☐	☐	☐	☐	☐	☐	☐	☐	☐	☐	☐	☐	☐
	CHANNEL ON	PREFADER LEFT	☐	☐	☐	☐	☐	☐	☐	☐	☐	☐	☐	☐	☐	☐	☐	☐	☐	☐	☐	☐	☐	☐	☐	☐	☐
		PREFADER RIGHT	☐	☐	☐	☐	☐	☐	☐	☐	☐	☐	☐	☐	☐	☐	☐	☐	☐	☐	☐	☐	☐	☐	☐	☐	☐
		POSTFADER LEFT	☑	☑	☑	☑	☑	☑	☑	☑	☑	☑	☑	☑	☐	☐	☐	☐	☐	☐	☐	☐	☐	☐	☐	☐	☐
		POSTFADER RIGHT	☐	☐	☐	☐	☐	☐	☐	☐	☐	☐	☐	☐	☐	☐	☐	☐	☐	☐	☐	☐	☐	☐	☐	☐	☐
	BUS SELECT	PROGRAM	☑	☑	☑	☑	☑	☑	☑	☑	☑	☑	☑	☑	☐	☐	☐	☐	☐	☐	☐	☐	☐	☐	☐	☐	☐
		AUDITION	☐	☐	☐	☐	☐	☐	☐	☐	☐	☐	☐	☐	☐	☐	☐	☐	☐	☐	☐	☐	☐	☐	☐	☐	☐
		TELEPHONE	☐	☐	☐	☐	☐	☐	☐	☐	☐	☐	☐	☐	☐	☐	☐	☐	☐	☐	☐	☐	☐	☐	☐	☐	☐
		NO BUS SELECTED	☐	☐	☐	☐	☐	☐	☐	☐	☐	☐	☐	☐	☐	☐	☐	☐	☐	☐	☐	☐	☐	☐	☐	☐	☐

THIS IS UTILITY BUS 1 MAIN.
USE THIS BUS IN CONJUNCTION WITH UTILITY BUS 6 MAIN TO FORM A STEREO PAIR.

To use to create an additional output bus (distribution amplifier):

For this application, set all channels for A and B inputs / left channel / post on/off / post fader. Select the output bus (in this illustration, program is selected) for which you want to create an additional output. **NOTE:** Number 6 main utility bus setup screen must then be programmed identically, **EXCEPT** that the right channels must be checked to create a right channel program output.

Utility Bus (mix-minus) - typical use setup illustrations
Creating an alternate offline feed from utility buses (program both screens below)

#1 Alternate Utility Bus Setup Screen - Example #3 - Creating an offline (secondary) feed

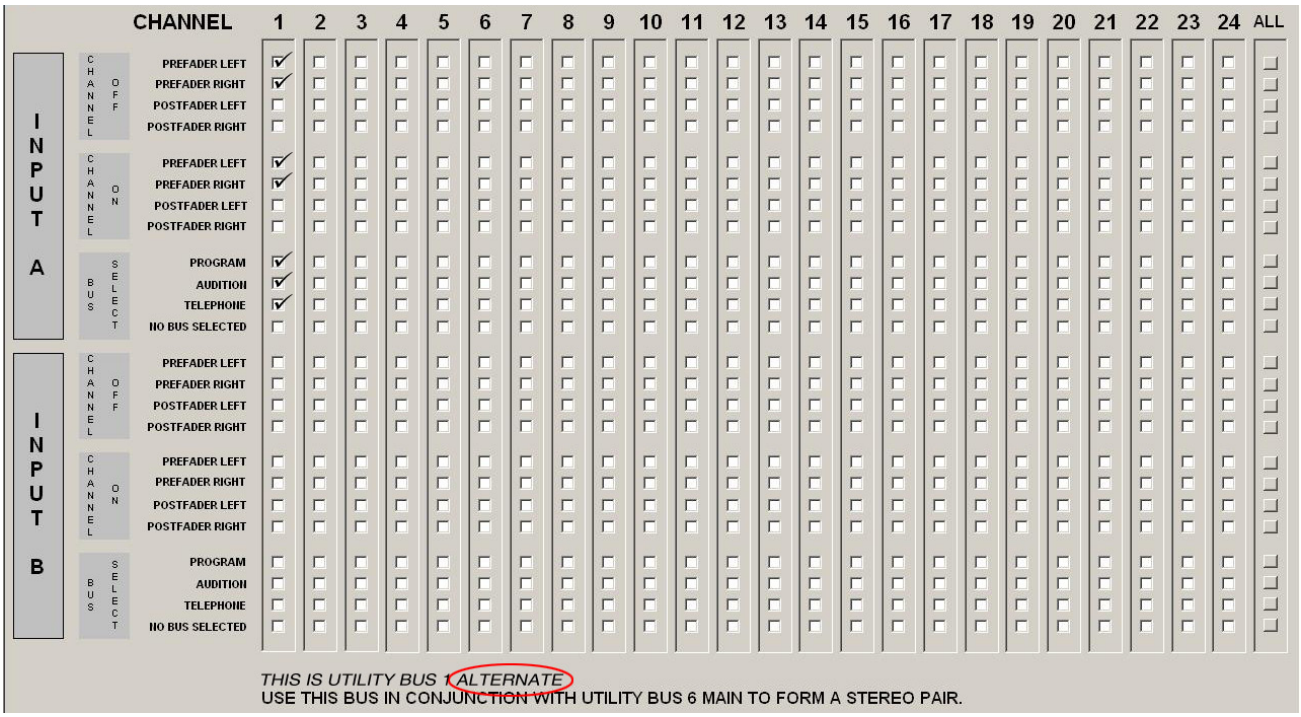

#1 Main/Alternate Utility Bus Selection Screen - Example #3 - Creating an offline (secondary) feed

Use to create an “offline mix” to send DJ mic to caller when channel is placed in cue

For this application, create an alternate mix-minus screen for the mix-minus channel being fed the caller (in this illustration utility bus 1) with the DJ mic channel (in this illustration channel 1) set for A and B input / pre on/off / pre fader / all buses allowed(ie. always on).

Then, per the illustration above, set the main alt switching screen to select the alternate (DJ mic) feed when the caller channel (in this illustation channel 10) is placed in cue. Note, the channel on/off button or one of the eight position

Utility Bus (mix-minus) - typical use setup illustrations
Utilitzing utility buses for intercom feeds from utility buses

#1 Alternate Utility Bus Setup Screen - Example #4 - Creating an intercom feed

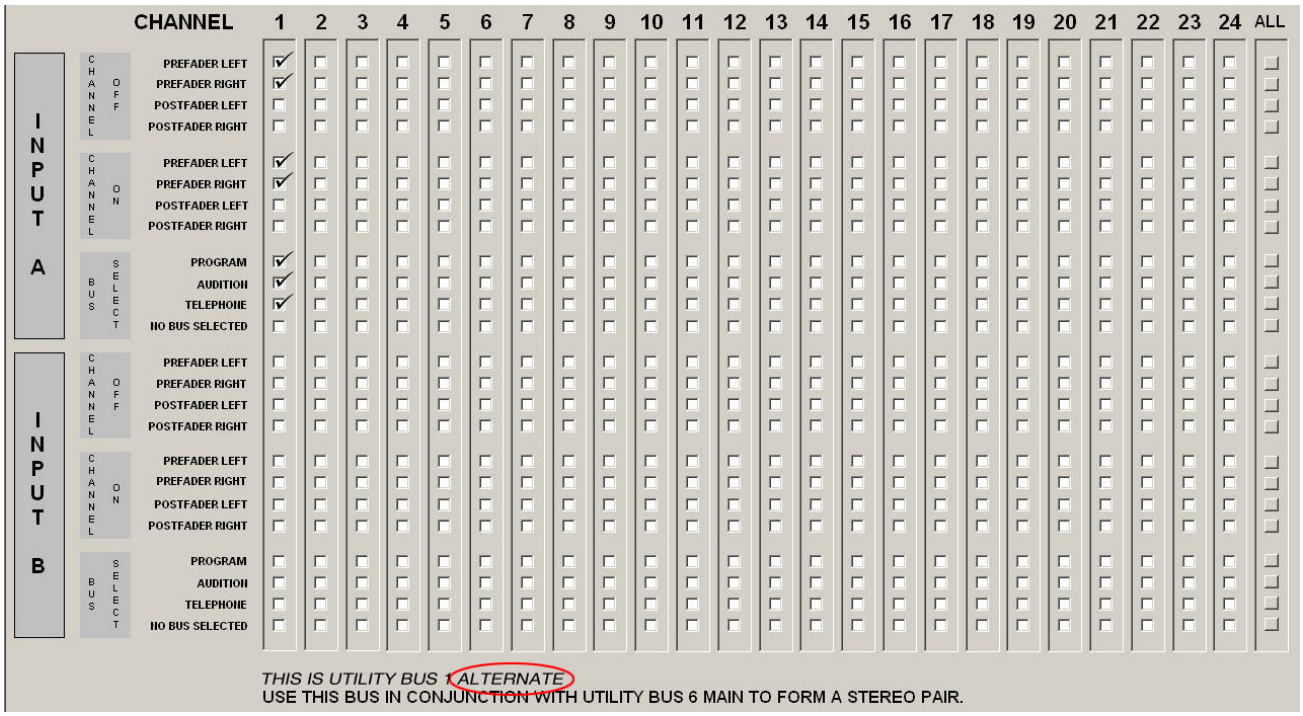

#1 Main/Alternate Utility Bus Selection Screen - Example #4 - Creating an intercom feed

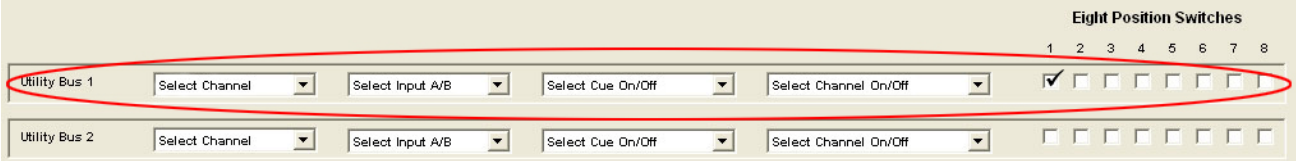

#1 8 Position Switch Selection Screen - Example #4 - Creating an intercom feed

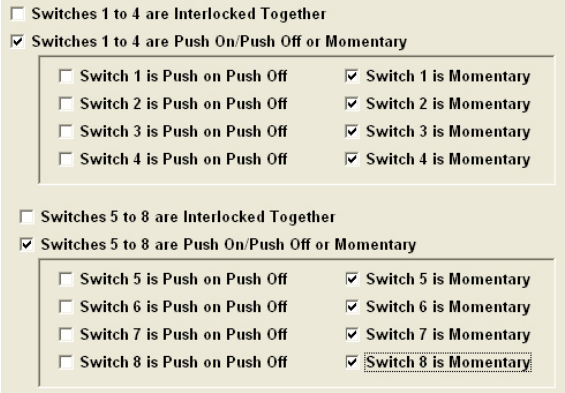

Use to create up to eight intercom or line level selectable feeds:

For this application create an alternate mix-minus screen with the DJ mic channel (in this illustration channel 1) set for A and B input / pre on/off / pre fader / all buses allowed (ie. always on).

Then, per the second illustration above, set the main alt switching screen to select the alternate utility bus 1 (DJ mic always on) feed when switch #1 on the eight position switcher is pressed.

Then, per the third illustration above, program the eight position switches for momentary operation. Note that the switches can also be set for push on and push off in an exclusive, or non-exclusive mode as preferred for a specific application.

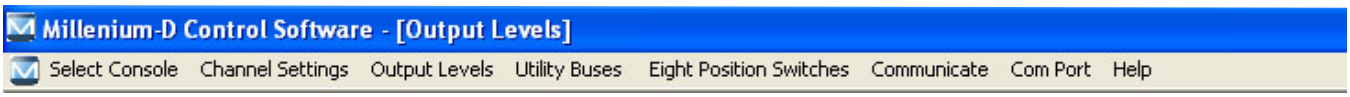

Select Console

This pull-down menu contains item selections which provide:

1 - Console ID# selection

2 - Console not found error message.

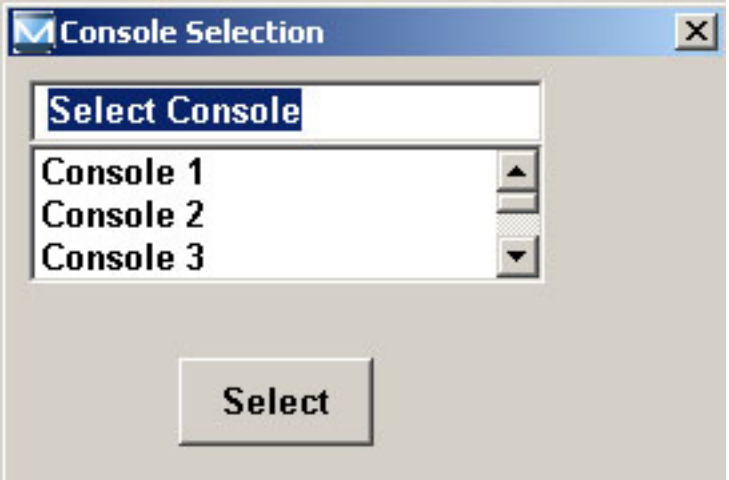

Screen #1 Select Console I.D.

Select the console number that you wish to communicate with.

Console is shipped from factory with default I.D. #1.

Screen #2 Selected Console Not Found

Error message reports if the selected console I.D. is not found on the RS-232 communications buses. To identify a console on the bus, push and hold both the "7" and "8" buttons on the front panel selector for 5 seconds. The console will report its I.D select screen.

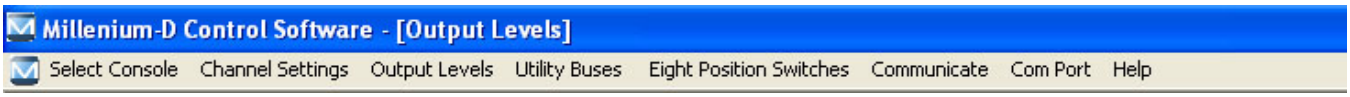

Channel Settings

This pull-down menu contains item selections which provide input channel operational and level settings, each selective on a channel-by-channel and/or input-by-input basis:

1- Programming of the “cue exclusive” mode”

2- Input A & B level trim selection

3- Pre-fader level set selection

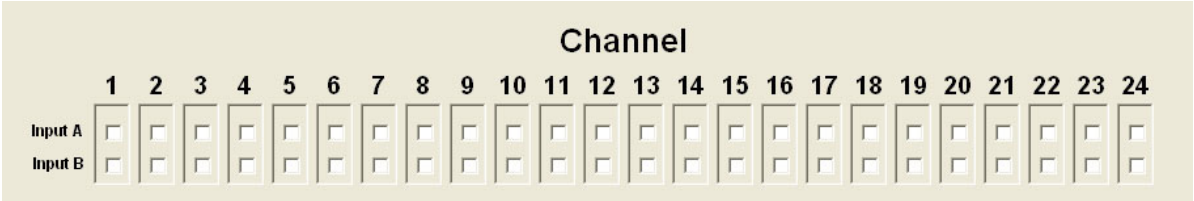

Screen #1 Cue Exclusive

Select any input where it is desired that when the front-panel cue switch is depressed, all other main outputs (PGM, AUD, TEL) will be automatically muted.

Note, front panel bus selection lamps are not effected when in cue mode. Inputs will return to the buses selected when the cue mode is exited.

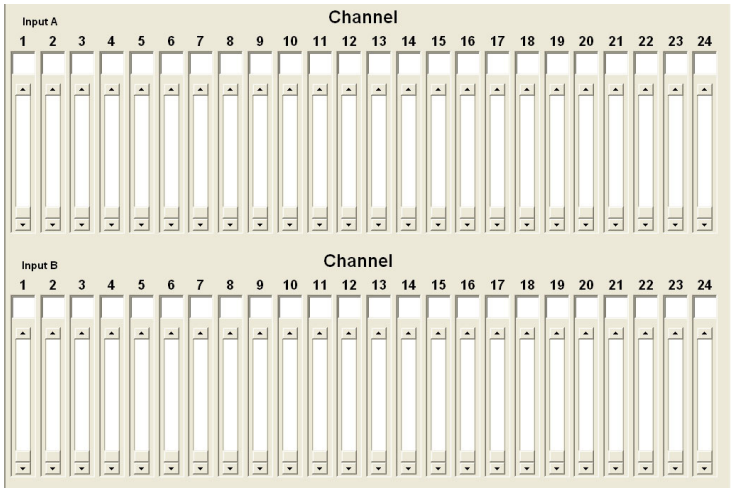

Screen #2 Input A Level Trims

Trim input levels in .1 db steps to a maximum of 12.5 db level boost or 12.5 dB level attenuation.

Trims should be set to match nominal operating levels (i.e.. so that all inputs present at 0VU when the input fader is at odB (bold line set.)

Screen #3 Input B Level Trims

The next menu option is an identical screen for all “B” input level trims.

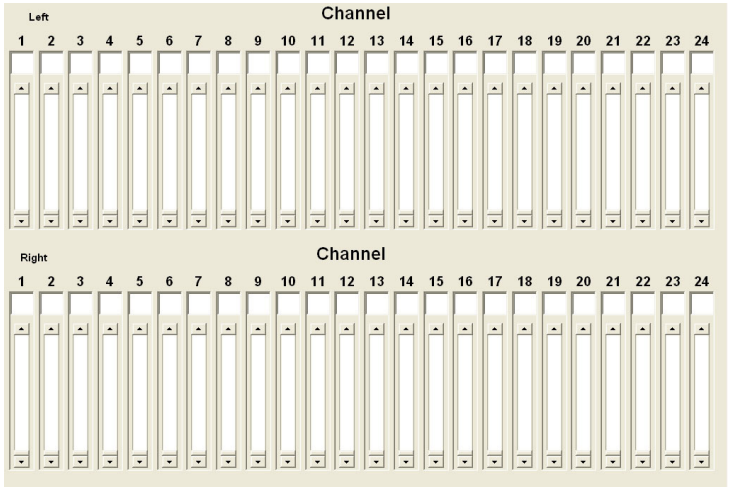

Screen #4 Pre-Fader Level Set

Select the output level for the pre-fader output buses. These buses are then available as utility busses as selected and routed on the “Utility Bus” menus.

Note - output levels may be trimmed from +15 db to off.

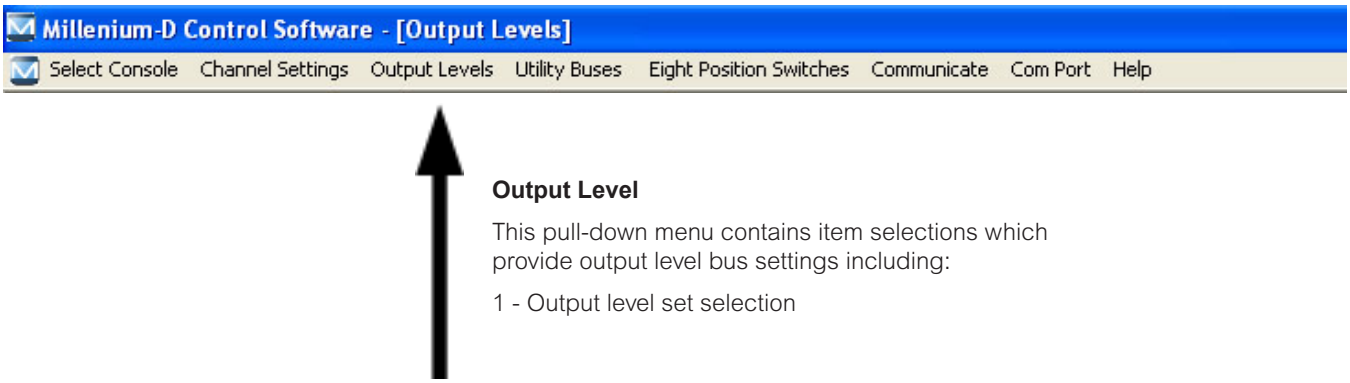

Output Level

This pull-down menu contains item selections which provide output level bus settings including:

1 - Output level set selection

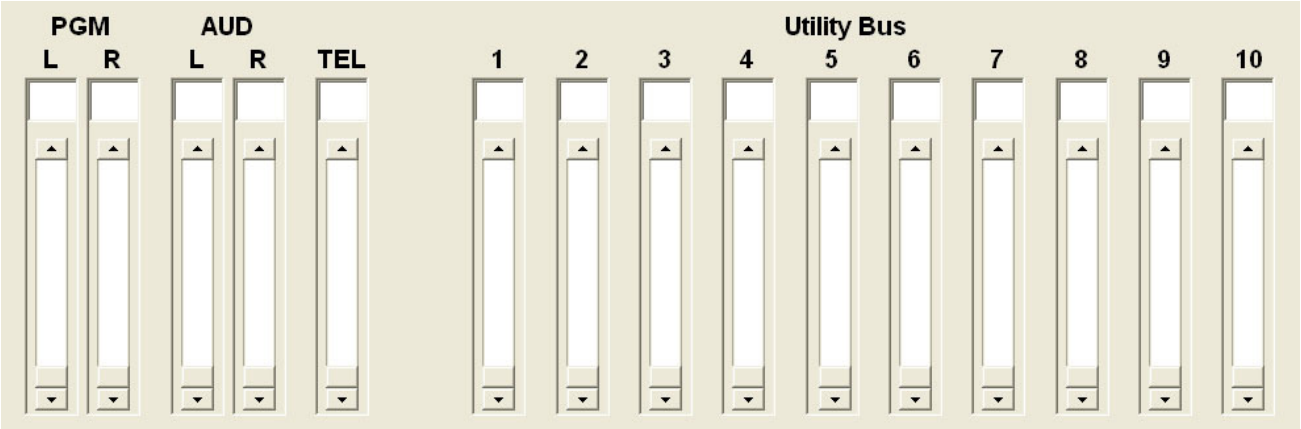

Screen #1 Output Level Set

Select the output level for all digital output buses.

Note - output levels may be trimmed to a maximum of +4db level boost or infinite dB level attenuation. Levels are factory default set to +4dbu out (with input levels of 0dB.)

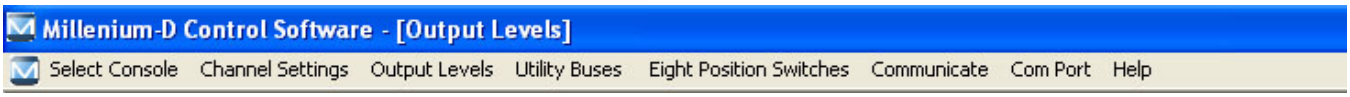

Utility Buses

This pull-down menu contains item selections which provide Utility Bus routing settings including:

1- 10 Main Utility bus routing screens

2- 10 Alternate Utility bus routing screens

3- 1 Main / Alternate Utility Bus switching screen

Each of the 10 Utility bus provide a Main and Alternate set up screen to configure what channel audio will mix to comprise that Utility bus. Additionally, a Main / Alternate switching screen is provided to select when the Main or Alternate selections are active for each bus.

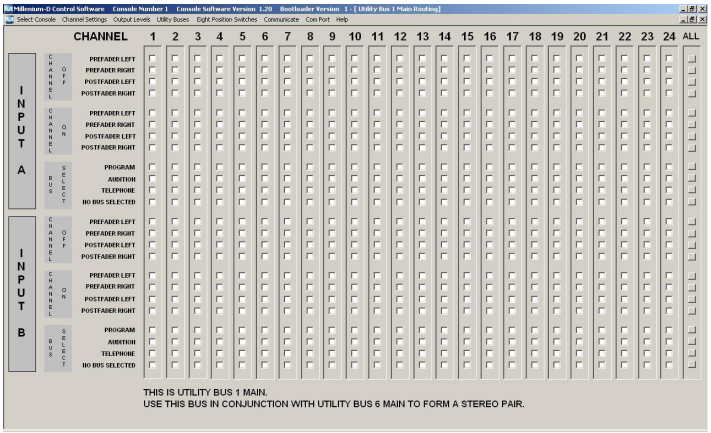

Screen #1-10
Main Utility Bus Routing

Select witch input signals feed the Utility bus screen shown. Options for each input channel selected include:
Pre or post fader
Pre or post on/off switch
A & B inputs
Left & Right channels.
Bus Selected

Screen #11-21
Alternate Utility Bus Routing

When an alternate (second) mix for a Utility bus is required, configure this buse's alternate mix on the corresponding alternate Utility bus screen. Options for each input channel are identical to the main utility bus screen. Main / Alternate utility buses are automatically voted based on paramaters selected on menu option #22 below.

Note- When programming stereo pairs (for either analog or digital outputs) group as follows:

Out 1 - Channels 1&6
Out 2 - Channels 2&7
Out 3 - Channels 3&8
Out 4 - Channels 4&9
Out 5 - Channels 5&10

Screen #22
Main/Alternative Utility Bus Select

For each Utility Buss a trigger can be established to activate either a Main or Alternate buss configuration. Triggers include:
8 position front-panel switcher
Cue channel switching
Same channel on/off buttons
Other channel on/off buttons

Note 1 - If no trigger options are selected for a particular Utility Bus, that bus will remain constantly in the "Main" Utility bus mix selection.

Note 2 - Reentering and changing the "8 position selector switch" menu will require that all Main / Alternate Utility bus selections be reselected.

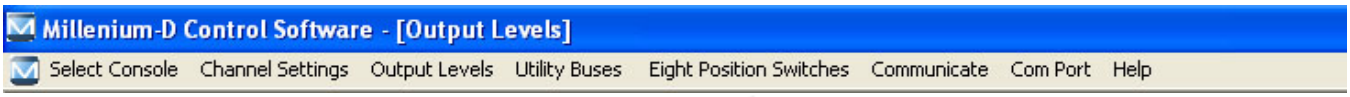

8 Position Switches

This pull-down menu contains item selections which configure the operation of the 8 front panel selector switches. Menus include:

1- 8 position switch interlock modes

2- Configuration change warning screen

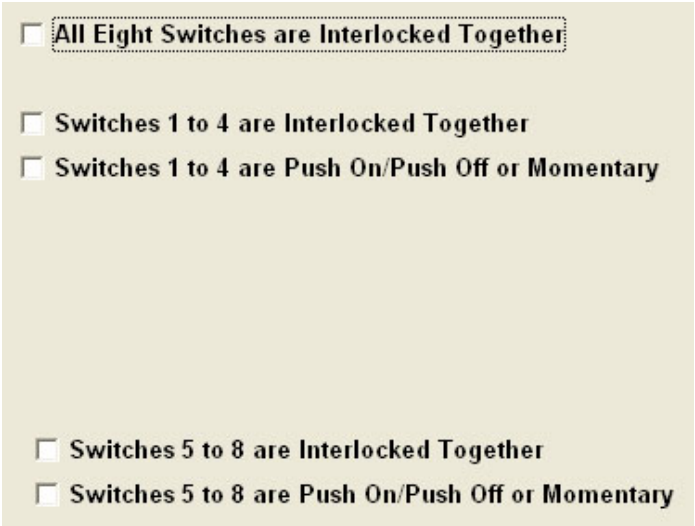

Screen #1 Eight Position Switch Setup

Select the operational mode for the front-panel 8-position switcher.

Note - this switcher may be assigned to control:

Utility buss switching (see “Utility busses menus)

4-source router cards (optional boards required)

4sqwack box cards (optional boards required)

Screen #3 Eight Position Switch Setup Warning

Alert screen which appears after every selection change to the Eight Position Switch Set-Up screen to advise that the Utility buss switching set-up has been cancelled and must be re-set. This is done as a precaution since some main / alt buss switching relies on the operating mode of the 8-position switcher.

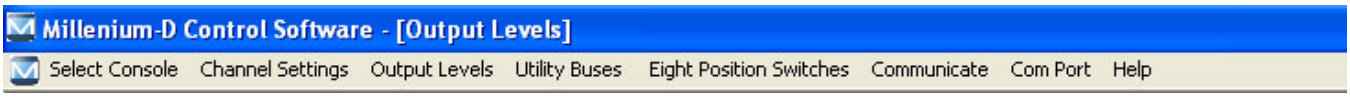

Communications

This pull-down menu contains item selections which configure PC communications with the console including:

1- Select console ID#

2- Console serial port termination

3- Factory presets proceed message

4- Factory presets restore (selective)

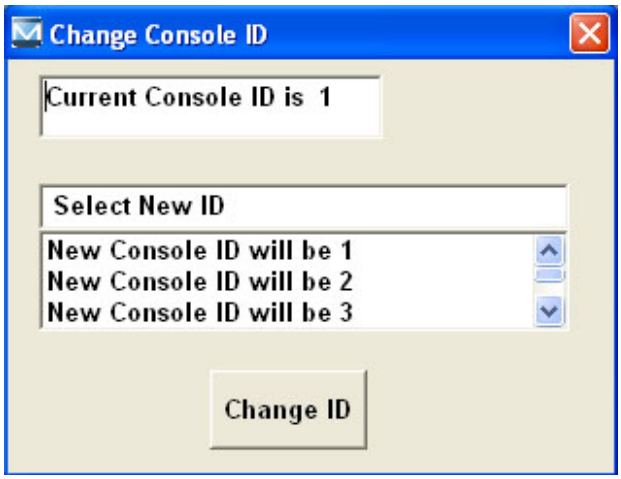

Screen #1 Change Console ID

Select a unique console ID.

Default factory ID is 1.

Multiple consoles should be numbered sequentially.

This option allows a single PC to be serially connected to multiple Millenium-D consoles and is only valid / required in a multi Millenium-D console installation.

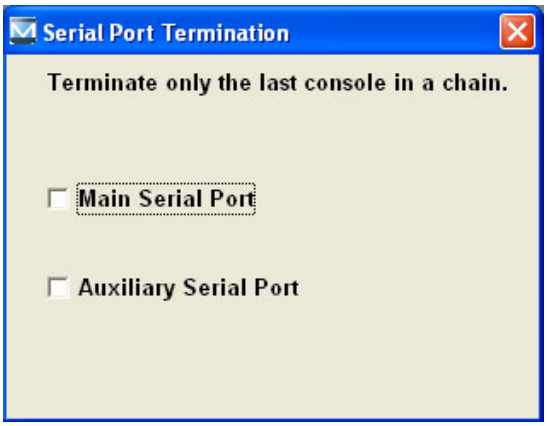

Screen #2 Serial Port Termination

Electronically terminate the last (or only) console serial port in the serial port chain.

Note - Default is main serial port terminated.

Screen #3 Factory Presets Proceed

Caution screen to proceed to Factory Presets screen

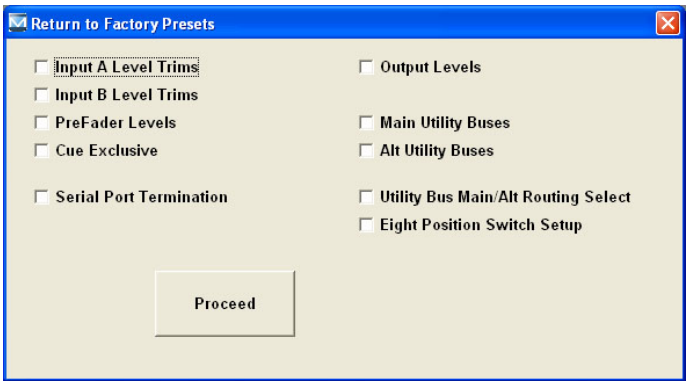

Screen #4 Return to Factory Presets (Selective)

Selectable select any group of presets to be reset to factory default settings.

Note 1 - All screens pictured in the software description section are shown in default modes.

Note 2 - If no boxes are checked, “proceed” button will have no effect on software selections.

Note 3 - When the “proceed” button is pressed, it will change to “wait,” and then revert again to “proceed” once all changes are saved.

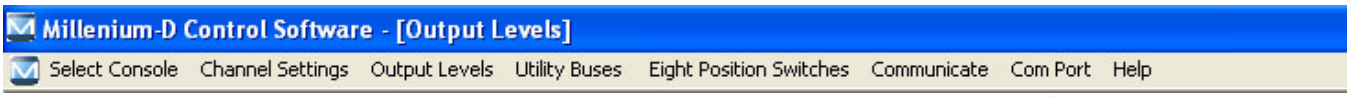

Serial Communication Port

This pull-down menu contains item selections that set the PC COM Port incluing:

1- Serial COM Port set

2- Serial COM port error message

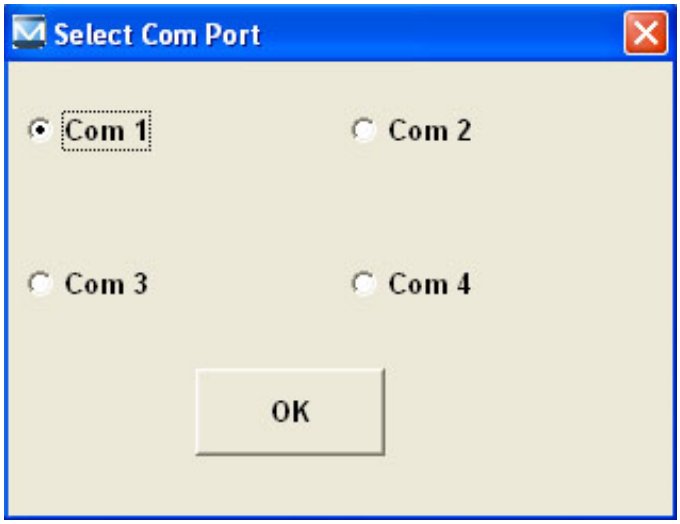

Screen #1 COM Port Selection

Select the PC COM port you are using to communicate with the console

Note - Defualt is PC COM port #1

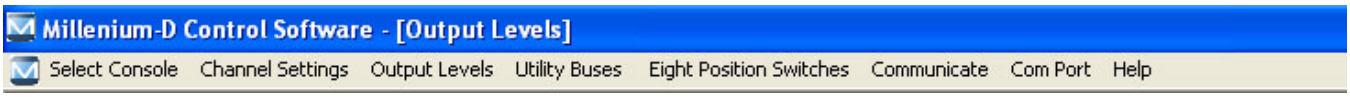

Help Screens

This pull-down menu contains help and informational screens including:

1 - “Help About” software version information

2 - Help messages

Screen #1 About Millenium D
Select to view software version information.

Automatically updated when new software revisions are installed.